PROFE TECH

Professional mətbəx avadanlıqları

Rəsmi distrubyutoru olduğumuz şirkətlər

equip.me
dealer portal for wholesale

HURAKAN

Apach Cook Line

UNOX

retigo®

Hamilton Beach

LEVIN

robot coupe

wanzl

MODERN EXPO

VESTA

TATRA

RAPS
PERFORMANCE INSIDE

Scotsman
Ice Systems

PACO JET

fimar group

TurhanÇelik

ARKTO

ORIGINAL HENKELMAN
VACUUM SYSTEMS

Infrico

B.PRO
CATERING SOLUTIONS

PINTINOX

WARING COMMERCIAL

Intercold

FAGOR

İşinizi Peşəkarlara etibar edin!

30 ilə yaxın təcrübə və minlərlə məmnun müştərimiz bizim etibarlı və professional işimizin ən yaxşı təsdiqidir.

Biz geniş bir mətbəx avadanlığı çeşidləri təklif edirik: sadə avadanlıqlar və mətbəx vasitələrindən, qastronomiya incilərinin yaradılmasına imkan verən yüksək texnologiyalı maşın və qurğulara qədər.

Biz düzgün avadanlıqların hər hansı bir təminat olduğuna inanırıq, buna görə də yalnız ən yaxşı məhsulları təklif edirik. Bizim mütəxəssislərimiz hər zaman sizin biznesinizə ən uyğun avadanlıqları seçərək, quraşdırılması və xidməti ilə kömək edəcəklər.

PROFE TECH

Bizə güvənən şirkətlərdən bəziləri

KFC
FRIDAY
hacı SOKAKTA
COFFEE SPACE
FÜZULİ INTERNATIONAL AIRPORT
unity FOOD
MARRIOTT BAKU BOULEVARD
FLAME KITCHEN & WINE
NOTES

ZAFFERANO Restaurant Baku
ESPRESSO HOUSE
AHG HOTELS & RESORTS
ODESA
МЯТА LOUNGE CENTER
CROCUS GROUP
ZAFFERANO RESTAURANT
MAMA Накормила
DINAMO HOTEL BAKU
BURGER KING
АБРАУ-ДЮРСО
CRAZZY BEAR
CRAZZY CHAMELEON
150 for X ARIGIS MAGAZINE
CUPPA COFFEE
ASG BUSINESS AVIATION
QURUBƏY
WOOGA
bp
LE PARÜLE PIZZERIA & ORTO
CINNABON
SHUR restaurant
BITTER
THE HAZE
NOTES
EXTRAORDINARY BREAST COFFEE
THE GASTRO
Ehtiram FARZALIBAYOV
SAVALAN ASPI WINERY AZERBAIJAN
MOLTO

Latteria Operating Company
Salmanoğlu Kimya
BRIDGCE Restaurant
WEMBLEY QSC
IMESKO
CASPAN MARINE
ZANGILAN International Airport
ASG AVIATION SERVICES GROUP
СЫРОВАРНЯ
CUPPA COFFEE
Tərtər Aqropark
Agropark Shamkir
Kvartira 74
Crocus Plus Group
NƏLƏKİ

Profetech İştrak ediyi sərgilər və tədbirlər

İnfrico şirkəti İspaniya 2024

Ehtiram Fərzəlibəyov ilə birlikdə Masterclass

Novikov Cafe Baku 2023

Baku Expo Center Interfood Exhibition 2023

EuroShop Germany 2023

Milli Kulinariya Konqresi 2022

HOST Milano 2023-cü il sərgisi

HOSTECH by Tusid İstanbul 2023

EuroShop 2023 **Almaniya**

PIR EXPO 2021 **Rusiya**

PIR EXPO 2022 **Rusiya**

Equip Group **Gürcüstan**

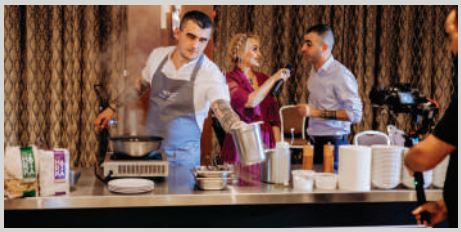

Marriott Hotel Boulevard 2022

Masterklass Retigo 2022

Profetech 7/24 servis

Türkiyə və Almaniyada təlim keçmiş peşəkar ustalar

Rəsmi sosial media və veb saytımız

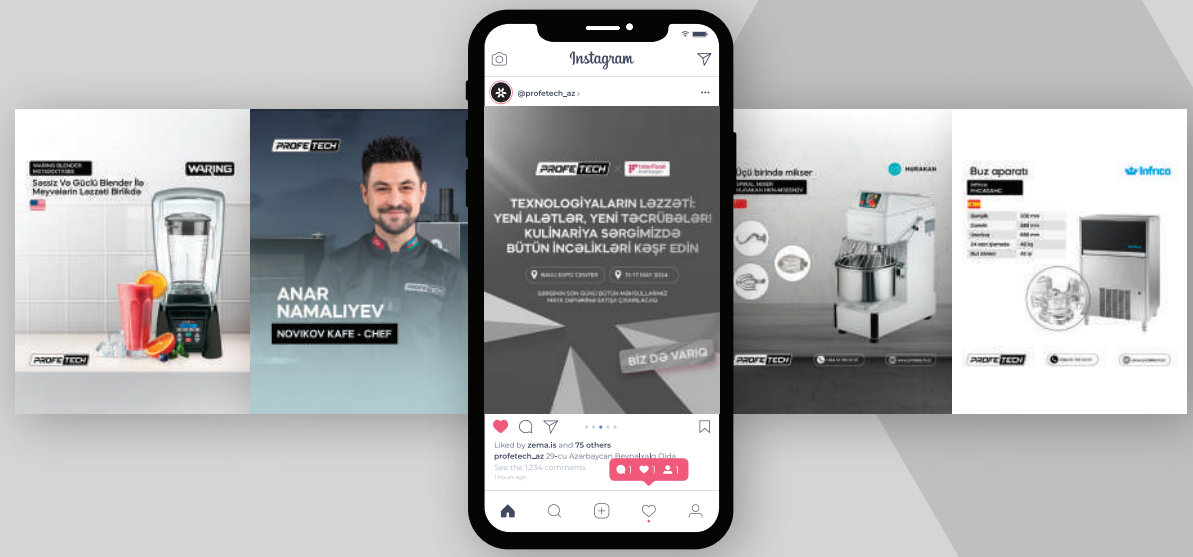

skan et

www.profetech.az

HURAKAN

HURAKAN

Çin istehsalı

BESTSELLER

Souse Vide Cookers
HURAKAN HKN-SV12

Ənənəvi
Pişirmə sobası

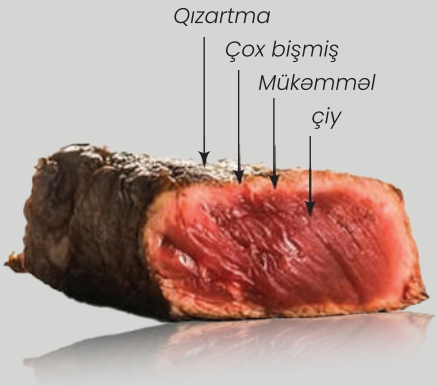

HKN-SV12
Pişirmə sobası

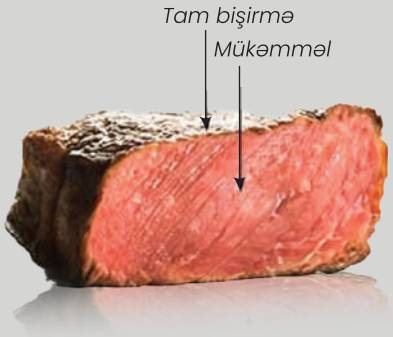

Souse Vide Cookers

Model	HKN-SV12	HKN-SV40	HKN-SV12
Working temperature, °C	up to 90	25...99	25...99
Voltage, V	230	230	220
Power, kW	1,2	1,5	2
Externaldimensions, mm	93x115x396	150x70x340	115x90x365
Net Weight, kg	1.8	2.4	2.5

BESTSELLER

INDUCTION COOKER HURAKAN HKN-ICF35DX47

Yeni səviyyəyə qədəm qoyun
4 QAT induksiyalı ocaq.

Model	HKN-ICF35DX4
Working temperature, °C	60 to 280
Voltage, V	230/400
Power, kW	14
External dimensions, mm	735x830x150
Net Weight, kg	19.35

Induction Cookers

Model	HKN-ICF35M	HKN-ICF35D	HKN-ICF70D
Working temperature, °C	60 to 280	60 to 280	60 to 280
Voltage, V	230	230	230
Power, kW	3.50	3.5	7
External dimensions, mm	326x415x110	328x396x110	660x396x110
Net Weight, kg	4.60	4	9.90

Induction Cookers

Induction Wok Cookers

Model	HKN-ICF70D2V	HKN-ICW35M WOK
Working temperature, °C	60 to 280	60 to 280
Voltage, V	230	230
Power, kW	7	3.50
External dimensions, mm	810x330x110	350x450x190
Net Weight, kg	9.90	5.70

Tosters

BESTSELLER

INDUCTION COOKER HURAKAN HKN-LONG VV

Yeni səviyyəyə qədəm qoyun
4 QAT induksiyalı ocaq.

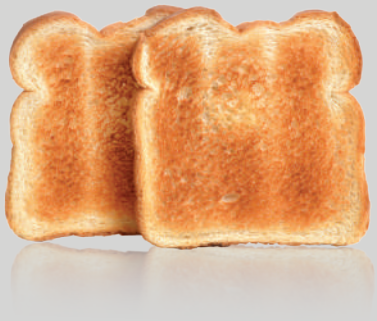

Model	HKN-LONG VV
Power, kW	1,7
Voltage, V	230
Product capacity, pcs/h	300
External dimensions, mm	362x502x330
Net Weight, kg	9.6

Electric griddles

Model	HKN-PSL550	HKN-PSR550	HKN-PSL730	HKN-PSLR730
Working temperature, °C	50 to 300	50 to 300	50 to 300	50 to 300
Voltage, V	230	230	230	230
Power, kW	3	3	4.40	4.40
External dimensions, mm	550x430x235	550x430x235	730x470x235	730x470x235
Net Weight, kg	15.8	15.8	24.6	24.6
Hotplate	smooth	ribbed	smooth	1/3 ribbed 2/3 smooth

Salamanders

Model	HKN-SAL450MBM	HKN-SAL600MBM	HKN-PSL730	HKN-PSLR730
Power, kW	2.8	4	2	2,2
Voltage, V	230	230	230	230
Heat zones	1	2	1	1
Temperature, °C	50...30	50...300	50...300	50...300
Chamber dimensions, mm	-	-	460x270x170	420x350x280
External dimensions, mm	450x480x520	600x480x530	570x340x250	580x420x380
Net Weight, kg	26.3	38.5	11.5	13

Contact Grills

Model	HKN-PE44MT	HKN-PE34R
Power, kW	3.6	2.2
Voltage, V	230	230
Heat zones	2	1
Temperature, °C	50- 300	50-300
Chamber dimensions, mm	-	-
External dimensions, mm	570• 370•210	430•370•210
Net Weight, kg	23	18.15

Corn Crispy Makers

Model	HKN-HCP5	HKN-HCP6
Power, kW	1.55	1.55
Voltage, V	230	230
Heat zones	1	1
Temperature, °C	-	-
Chamber dimensions, mm	-	-
External dimensions, mm	360•330•245	360•330•245
Net Weight, kg	7.5	8.5

Crepe Makers

Model	HKN-CSE400	HKN-CDE400C
Power, kW	3	6
Voltage, V	230	230
Heat zones	1	2
Temperature, °C	-	-
Chamber dimensions, mm	-	-
External dimensions, mm	490•450•230	880•450•230
Net Weight, kg	12.8	21.6

BESTSELLER

Doughnut Fryers

HURAKAN HKN-EF26

Yüksek qızartma süreti

Doughnut Fryers

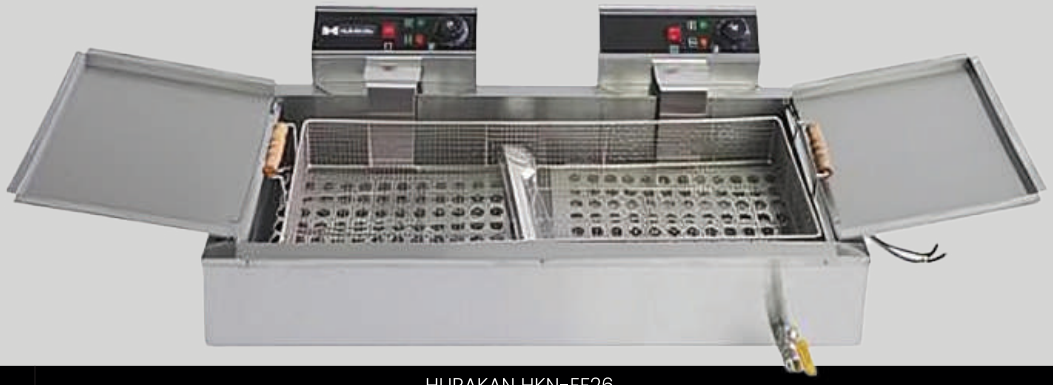

Model	HURAKAN HKN-EF26
Power, kW	7.8
Voltage, V	230
Heat zones	2
Temperature, oC	50-190
Chamber dimensions, mm	-
External dimensions, mm	930•540•265
Net weight	16.3
Hotplate	-

Electric Fryers

Model	HKN-FT6N	HKN-FT8	HKN-FT10N
Power, kW	2.5	3.25	4
Voltage, V	230	230	230
Heat zones	-	-	-
Temperature, oC	60-190	60-190	50-190
Chamber dimensions, mm	-	-	-
External dimensions, mm	260•460•325	265•415•430	280•460•325
Net weight	4	8	6
Hotplate	1	1	1

Model	HKN-FT66N	HKN-FT88N	HKN-FT1010N
Power, kW	5	6.5	8
Voltage, V	230	230	230
Heat zones	-	-	-
Temperature, oC	60-190	60-190	50-190
Chamber dimensions, mm	-	-	-
External dimensions, mm	530•460•325	605•465•380	570•460•325
Net weight	8	14.6	13.5
Hotplate	2	2	2

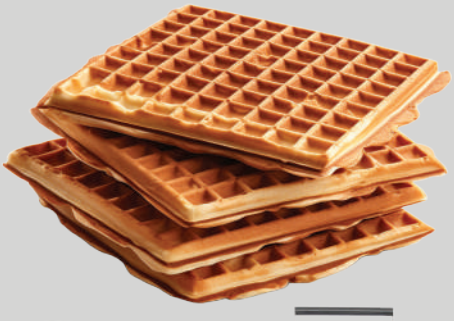

BESTSELLER

Waffle Makers

HURAKAN HKN-GED2M

ikiqat, 8 Belçika vaflisi hazırlamaq üçün

Waffle Makers

Model	HKN-GES2M	HKN-GES2L	HKN-GED2M
Power, kW	8	3.2	3.2
Voltage, V	230	230	230
Heat zones	-	-	-
Temperature, oC	50-190	up to 300 in 50	up to 300 in 50
Chamber dimensions, mm	-	-	-
External dimensions, mm	570•460•325	530•380•250	530•380•250
Net weight	13.5	13	13
Hotplate	2	8	8

Boilers

Model	HKN-HVZ25M	HKN-HVZ25MD	HKN-HVZ35M	HKN-HVZ90
Power, kW	2.5	2	12.5	3
Voltage, V	220	220	220	220
Heat zones	-	-	-	-
Temperature, oC	-		-	-
Chamber dimensions, mm	-	-	-	-
External dimensions, mm	190•240•500	270•220•510	190•240•580	340•190•740
Net weight	12	5.1	-	9.3
Hotplate	1	2	1	1

Flaming Burners

Smokers

Pasta Cookers

Model	HKN-FLB	HKN-SMG	HKN-EKT40	HKN-EKT60
Power, kW			4	6
Voltage, V			230	230
Heat zones			-	-
Temperature, oC			50-110	50-110
Chamber dimensions, mm			-	-
External dimensions, mm	122•50•154	90•55•110	420•470•360	590• 540• 450
Net weight			8.5	13.5
Hotplate			4	6

Refrigerated and Frezer cabinets

Model	HKN-GX650BT	HKN-GX650TN	HKN-GX1410TN	HKN-GX1410BT
Power, kW	0.48	0.22	0.4	0.77
Voltage, V	-	-	-	-
Heat zones	-	-	-	-
Temperature, oC	-18 to -22	-2 to +8	-2 to +8	-18 to -22
Chamber dimensions, mm	-	-	-	-
External dimensions, mm	740• 830• 2010	740•830•2010	1480• 830•2010	1480•830•2010
Net weight	134	126	188	201
Hotplate	1	1	2	

Refrigerated and Frezer Counters

Model	HKN-GN3TN-222	HKN-GN4TN	HKN-GNL3TN
Power, kW	0.23	0.35	0.24
Voltage, V	-	-	-
Heat zones	-	-	-
Temperature, oC	-2 to +8	-2 to +8	+2...+8
Chamber dimensions, mm	-	-	-
External dimensions, mm	1795•700•650	2230•700•650	1365•700•850
Net weight	147	135	106
Hotplate	6	4	3

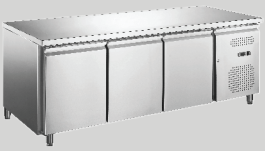

Model	HKN-GN2BT	HKN-GN2TN	HKN-GN3BT	HKN-GN3TN
Power, kW	0.52	0.22	0.56	0.23
Voltage, V	-	-	-	-
Heat zones	-	-	-	-
Temperature, oC	-18...-22	-2...+8	-18...-22	-2...+8
Chamber dimensions, mm	-	-	-	-
External dimensions, mm	1360•700•850	1360• 700•850	1795•700•850	1795•700•850
Net weight	122	105	143	121
Hotplate	2	2	3	3

Blast Chillers and Shock Frezers

Model	HKN-BCF5M	HKN-BCF10M	HKN-BCF14M
Power, kW	0.75	0.98	1.2
Voltage, V	-	-	-
Heat zones	-	-	-
Temperature, oC	70 to +3 / -18	70 to +3 / -18	70 to +3 / -18
Chamber dimensions, mm	-	-	-
External dimensions, mm	800•800•930	800•800•1515	800x800x1763
Net weight	108	160	190
Hotplate	1	1	1

Saladetts

Model	HKN-PZLG2	HKN-PZLG3	HKN-PZLGV2	HKN-PZLGV3
Power, kW	0.17	0.24	0.17	0.24
Voltage, V	-	-	-	-
Heat zones	-	-	-	-
Temperature, oC	2 to +8	2 to +8	2 to +8	2 to +8
Chamber dimensions, mm	-	-	-	-
External dimensions, mm	900•700•1075	1365•700•1075	900•700•1075	1365•700•1075
Net weight	103	162	106	166
Hotplate	2	3	2	3

Model	HKN-GNL2TN-22	HKN-GNL3TN-222	HKN-PZG3-116 ROCK
Power, kW	0.17	0.24	320
Voltage, V	-	-	230/50
Heat zones	-	-	-
Temperature, oC	2 to +8	2 to +8	-2 ... +8
Chamber dimensions, mm	-	-	-
External dimensions, mm	900x700x850	1365× 700×850	2020x800x1000
Net weight	101	155	-
Hotplate		6	-

BESTSELLER

Backbar Refrigerators
HURAKAN HKN-DB335S

Backbar Refrigerators

Showcase Freezers

Model	HKN-DB205S	HKN-DB125H	HKN-UF50G	HKN-UF100G
Power, kW	0,25	0,16	0,15	0,19
Voltage, V	230	230	230	230
Temperature, °C	+2...+10	+2...+10	-15...-22	-15...-22
Capacity, l	185	113	42	88
Noise level, dB	50	45	50	50
Refrigerant	R600a	R600a	R290	R290
External dimensions, mm	865x520x865	555x520x865	570x500x510	595x520x675
Net weight, kg	47	32	30	37

Wine Coolers

Model	HKN-WNC160CD	HKN-WNC160CDW	HKN-WNC50T	HKN-WNC69TD
Power, kW	0,08	0,08	0,065	0,13
Voltage, V	230	230	230	230
Temperature, °C	+5...+18	+5...+18	+12...+18	+8...+18 / +12...+18
Capacity, bottles	55	55	18	24
Temperature zones	2	2	1	2
External dimensions, mm	510x480x1262	510x480x1262	345x520x645	430x520x740
Net weight, kg	43,5	43,5	14,5	19,5

Wooden shelves

Model	HKN-WNC128CW
Power, kW	0,08
Voltage, V	230
Temperature, °C	+5...+18
Capacity, bottles	51
Temperature zones	1
External dimensions, mm	495x565x848
Net weight, kg	34

Ice Crushers

BESTSELLER

Ice Crushers

HURAKAN HKN-TRGM

Model	HKN-TR65	HKN-TRGM
Production capacity, kg/h	65	12
Ice bin capacity, l	0,7	3
Rotation speed, rpm	2 000	1 000
Power, kW	0,3	0,08
Voltage, V	230	230
External dimensions, mm	425x200x305	240x170x370
Net weight, kg	5	3,66

Infrared Heat Lamps

Model	HKN-DL775	HKN-DL800	HKN-DL825
Power, kW	0,25	0,25	0,25
Voltage, V	230	230	230
External dimensions, mm	190x190x600 (1500)	275x275x600 (1500)	175x175x600 (1500)
Net weight, kg	1,3	1,5	1,2

Refrigerated Toping Showcase

Model	HURAKAN HKN-VRX1200/330	HURAKAN HKN-VRX1200/380
Power, kW	0,11	0,11
Voltage, V	230	230
Temperature, °C	+2...+8	+2...+8
Cooling system	static	static
Capacity	5xGN1/4	4xGN1/3
Refrigerant	R600a	R600a
External dimensions, mm	1200x335x435	1200x395x435

Model	HURAKAN HKN-VRX1500/330	HURAKAN HKN-VRX1500/380	HURAKAN HKN-VRX2000/380
Power, kW	0,11	0,11	0,11
Voltage, V	230	230	230
Temperature, °C	+2...+8	+2...+8	+2...+8
Cooling system	static	static	static
Capacity	7xGN1/4	6xGN1/3	9xGN1/3
Refrigerant	R600a	R600a	R600a
External dimensions, mm	1500x335x435	1500x395x435	2000x395x435

Bread Slicers

Model	HKN-PICO12	HKN-PICO12M	HKN-PICO12M2
Power, kW	0,25	0,37	0,37
Voltage, V	230	230	230
Maximum loaf length, mm	380	375	375
Production capacity, loaves/h	180	240	240
Slice thickness, mm	12	12	12
External dimensions, mm	650x660x760	745x510x710	745x510x710
Net weight, kg	64	62	62

Sausage Fillers

Model	HKN-ISE10	HKN-ISE15	HKN-ISE30
Power, kW	0,12	0,12	0,25
Voltage, V	230	230	230
Capacity, l	10	15	30
External dimensions, mm	415x315x700	415x315x810	475x345x1052
Net weight, kg	32,5	34,5	54

Manual Sausage Fillers

Model	HKN-ISV2	HKN-ISV3	HKN-ISV5	HKN-ISV7
Capacity, l	2	3	5	7
External dimensions, mm	280x238x500	290x230x500	290x230x620	290x230x770
Net weight, kg	6	11	12	13

Vaccum Packaking

Model	HKN-VAC260	HKN-VAC400
Power, kW	0,37	0,9
Voltage, V	230	230
Vacuum pump capacity, m³/h	14,4	20
Sealing beam size, mm	260x5	390x10
Chamber dimensions, mm	285x389x50	400x420x65
External dimensions, mm	330x502x380	540x490x500
Net weight, kg	37,2	62,5

Vaccum PAckers

Model	HKN-V335 BLACK	HKN-V335
Power, kW	0,12	0,12
Voltage, V	230	230
Cycle, sec	6...10	6...10
Sealing beam length, mm	300	300
External dimensions, mm	420x220x90	420x220x90
Net weight, kg	2,9	2,9

Dough Dviders

Model	HKN-SPA36
Power, kW	0,75
Voltage, V	230
Dough piece weight, g	30-180
Number of portions	36
Loading capacity, kg	1,08-6,48
External dimensions, mm	520x410x1300
Net weight, kg	165

Dough Dviders

Model	HKN-DSH350
Power, kW	1,5
Voltage, V	230
Dough thickness, mm	0...25
Hopper width, mm	300
Rotation speed, rpm	75
External dimensions, mm	690x530x1070
Net weight, kg	113

Food Waste Disposers

Model	HKN-FWD370A	HKN-FWD370B	HKN-FWD450A
Power, kW	0,37	0,37	0,45
Voltage, V	230	230	230
Rotation speed, rpm	4200	4200	4200
External dimensions, mm	235x235x405	235x235x405	235x235x405
Net weight, kg	4,3	4,3	5

Spiral Mixers

Model	HKN-10CN	HKN-20CN	HKN-20CN2V	HKN-30CN
Speed settings	1	1	2	1
Power, kW	1,1	1,5	0,85	2
Voltage, V	230	230	400	230
Capacity, l	10	20	20	30
Maximum load, kg	5	8	8	12
Bowl rotation speed, rpm	18	18	12/18	18
Utensil rotation speed, rpm	156	156	100/156	156
External dimensions, mm	460x700x880	500x760x980	500x760x980	520x865x1050
Net weight, kg	108	125	136	151

Model	HKN-30CN2V	HKN-40CN	HKN-40CN2V
Speed settings	2	1	2
Power, kW	1,8	2,2	2,2
Voltage, V	400	230	400
Capacity, l	30	40	40
Maximum load, kg	12	15	15
Bowl rotation speed, rpm	12/18	18	12/18
Utensil rotation speed, rpm	100/156	156	100/156
External dimensions, mm	520x865x1050	520x930x1050	520x930x1050
Net weight, kg	151	175	175

Planetary Mixers

Model	HKN-IP10FM	HKN-IP15FM
Power, kW	0,37	0,37
Voltage, V	230	230
Capacity, l	9,8	13,1
Utensil rotation speed, rpm	90/160/300	90/160/300
Maximum load, kg	1	1,5
External dimensions, mm	444x360x650	444x360x650
Net weight, kg	53	58

Model	HKN-IP20FM	HKN-IP30FM	HKN-IP50FM	HKN-IP60FM
Power, kW	1,1	1,5	2	2,2
Voltage, V	230	230	400	400
Capacity, l	19	28	50	67,8
Utensil rotation speed, rpm	105/180/425	110/200/420	65/102/296	82/163/318
Maximum load, kg	3	3-6	5-10	6-12
External dimensions, mm	513x405x762	450x430x880	780x680x1260	820x700x1260
Net weight, kg	76	80	186	221

Bone Saws

BESTSELLER

Bone Saws

HURAKAN HKN-SE1650M

Model	HKN-SE1650	HKN-SE1650M
Power, kW	0,75	0,75
Voltage, V	230	230
Blade length, mm	1650	1650
Max cut height, mm	220	270
Blade speed, m/s	-	15
Plate size, mm	400x435	445x465
External dimensions, mm	530x515x955	470x480x850
Net weight, kg	36,3	35

Slicers

Model	HKN-HM220	HKN-HM250	HKN-HM300	HKN-GSP300
Power, kW	0,12	0,15	0,25	0,85
Voltage, V	230	230	230	230
Blade diameter, mm	220	250	300	300
External dimensions, mm	420x380x340	470x400x370	560x460x430	520x450x660
Net weight, kg	12,8	15,5	23,4	46

Meat Mincers

Model	HKN-22SS	HKN-12SCE	HKN-22SS	HKN-22SP
Power, kW	1,1	0,85	1,1	0,85
Voltage, V	230	230	230	230
Production capacity, kg/h	220	160	220	250
External dimensions, mm	520x220x445	380x215x410	520x220x445	410x240x450
Body	aluminum	stainless steel	aluminum	painted steel
Meat mincer part	stainless steel	chromed metal	stainless steel	stainless steel
Cutting system	unger	enterprise	unger	enterprise
Net weight, kg	23,2	18	23,2	27

Apach
Apach

Apach Cook line

Apach
Cook *line*

İtalya istehsalı

BESTSELLER

Water Grills

APACH APGEW-87P

Water Grills

Model	APGEW-47P	APGEW-87P
Grids included	2	4
Electric power, kW	6	12
Voltage, V	400	400
External dimensions, mm	400x700x850	800x700x850
Net weight, kg	37	80

Braising Pans

Boiling Pans

Model	APSE-87	APSE-87	APKE-77	APKG-77
Capacity, l	50	50	50	50
Voltage, V	400	-	400	-
Electric power, kW	9	-	9	-
Gas power, kW	-	13.5	-	12,5
External dimensions, mm	800x700x850	800x700x850	700x700x850	700x700x850
Net weight, kg	115	110	83	81

Electric Square Plates

Model	APRE-47P	APRE-77P	APRE-77FE	APRE-117P
Hotplates	2	4	4	6
Open stand	*	*	-	*
Neutral cabinet	-	-	-	-
Electric oven	-	-	*	-
Hotplates power, kW	2x2,6	4x2,6	4x2,6	6x2,6
Oven electric power, kW	-	-	5,3	-
Voltage, V	400	400	400	400
Total power, kW	5,2	10,4	15,7	15,6
External dimensions, mm	400x700x850	700x700x850	700x700x850	1100x700x850
Net weight, kg	38	59	89	83

Gas Burners

Model	APRG-47P	APRG-77P	APRG-77FG
Burners	2	4	4
Open stand	*	*	-
Electric oven	-	-	-
Gas oven	-	-	*
Burners power, kW	2x7	4x7	4x7
Oven electric power, kW	-	-	-
Oven gas power, kW	-	-	6
Voltage, V	-	-	-
Total electric power, kW	-	-	-
Total gas power, kW	14	28	34
External dimensions, mm	400x700x850	700x700x850	700x700x850
Net weight, kg	33	53	81

BESTSELLER

Pizza Ovens

APACH AML44X

Pizza Ovens

Model	AML4X	AML44X
Chambers	1	1
Temperature, °C	50...500	50...500
Chamber dimensions, mm	720x720x140	720x1080x140
Power, kW	6	9
Voltage, V	400	400
External dimensions, mm	1010x850x420	1010x1210x420
Net weight, kg	115	165

Sous Vide Cookers

Model	ASV 1/1 GN	ASV2	ASV WI-FOOD
Working temperature, °C	24...99	24...99	24...99
Working capacity, l	22	-	-
Drain tap	-	-	-
Voltage, V	230	230	230
Power, kW	1,7	2	2
External dimensions, mm	565x360x300	130x260x380	165x203x377
Net weight, kg	16	4,5	4

Fry Tops

Model	APTE-47PL	APTG-77PLR
Smooth plate	*	-
Ribbed plate	-	*
1/2 smooth, 1/2 ribbed plate	-	-
Chromed plate	-	-
Hotplate dimensions, mm	350x570	350x570
Open stand	*	*
Voltage, V	400	400
Electric power, kW	4	4
External dimensions, mm	400x700x850	400x700x850
Net weight, kg	53	53

Fryers

Model	APFE-47/2P	APFE-77P
Tanks	2	2
Capacity, l	7 + 7	13 + 13
Closed cabinet	*	*
Baskets included	2	2
Voltage, V	400	400
Electric power, kW	10,5	18
Gas power, kW	-	-
External dimensions, mm	400x700x850	700x700x850
Net weight, kg	57	63

Glassüashing Machines

Model	AF400	AF400 DDP
Control panel	Manual	Manual
Capacity, racks/h	30	30
Useful height, mm	320	320
Rack size, mm	385x385	385x385
Cycles, sec	120	120
Water consumption/cycle, l	1,8	1,8
Voltage, V	230	230
Power, kW	3,5	3,5
External dimensions, mm	436x535x670	436x535x670
Net weight, kg	31	31
CONFIGURATION		
Detergent dispenser	-	*
Rinse aid dispenser	*	*
Drain pump	-	*
Cold water connection	-	-
Tank filters	*	*
Glass rack	*	*
Cutlery container	*	*
Support for plates	*	*

Dishwashing Machines

Model	AFTRD500 DD	AFTRD500 DDP
Control panel	Manual	Manual
Useful height, mm	350	350
Rack size, mm	500x500	500x500
Cycles, sec	60/120	60/120
Voltage, V	230	230
Power, kW	3,5	3,5
External dimensions, mm	580x630x830	580x630x830
Net weight, kg	31	31
CONFIGURATION		
Detergent dispenser	*	*
Rinse aid dispenser	*	*
Drain pump	-	*
Cold water connection	*	*
Tank filters	-	-
Glass rack	*	*
Cutlery container	-	-
Dish rack	*	*

Hood Type Dishwashing MAchines

Model	AC800(ST3800RU)	AC800DD(ST3801RU)
Control panel	Manual	Manual
Capacity, racks/h	60/30	60/30
Hood opening, mm	450	450
Rack size, mm	500x500	500x500
Cycles, sec	60/120	60/120
Water consumption/cycle, l	2,6	2,6
Voltage, V	400	400
Power, kW	8,5	8,5
External dimensions, mm	724x818x1529	724x818x1529
Net weight, kg	90	90
CONFIGURATION		
Detergent dispenser	-	-
Rinse aid dispenser	*	*
Drain pump	-	*
Cold water connection	*	*
Tank filters	*	*
Dish rack	*	*
Glass rack	*	*
Cutlery container	*	*

Utesil Washing Machines

Model	AK 901	AK 902
Control pane	Digital (4 cycles)	Digital (4 cycles)
Hood opening, mm	650	850
Rack size, mm	560x630	560x630
Water consumption/cycle, l	3-4,5	3-4,5
Voltage, V	400	400
Power, kW	10,5	10,5
External dimensions, mm	719x782x1727	719x782x1927
Net weight, kg	148	173
CONFIGURATION		
Detergent dispenser	*	*
Rinse aid dispenser	*	*
Self cleaning cycle	*	*
Cold water connection	*	*
Tank filters	*	*
Stainless steel rack	*	*
Stainless steel tray insert	-	-

Meat Mincers

Model	ATS8 1PH	ATS8/SS 1PH	ATS12 1PH/3PH	ATS12/SS 1PH/3PH
Power, kW	0,38	0,38	0,75	0,75
Voltage, V	230	230	230/400	230/400
Production capacity, kg/h	15	15	150/400	150/400
External dimensions, mm	270x260x360	270x260x360	370x220x440	370x220x440
Mincing unit	alumunium	stainless steel	Cast iron	stainless steel
Cutting system	enterprise	enterprise	enterprise	enterprise
Net weight, kg	9	9	19	19

Model	ATS12U 1PH/3PH	ATS12U/SS 1PH/3PH	ATS22 1PH/3PH	ATS22/SS 1PH/3PH
Power, kW	1.1	1.1	1.1	1.1
Voltage, V	230/400	230/400	230/400	230/400
Production capacity, kg/h	200	200	200	200
External dimensions, mm	370x220x440	370x220x440	370x510x440	370x510x440
Meat mincer part	cast iron	stainless steel	cast iron	stainless steel
Cutting system	1/2unger	1/2unger	1/2unger	enterprise
Net weight, kg	23/21	23/21	24/22	24/22

Model	ATS22UT 1PH/3PH	ATS22UT/SS 1PH/3PH
Power, kW	1.1	1.1
Voltage, V	230/400	230/400
Production capacity, kg/h	300	300
External dimensions, mm	440x240x510	440x240x510
Meat mincer part	cast iron	stainless steel
Cutting system	unger	unger
Net weight, kg	25/23	25/23

Rack Type Dishwashing Machines

Model	ARC100
Control panel	Digital
Capacity, racks/h	60/120
Hood opening, mm	440
Rack size, mm	500x500
Water consumption, l/hour	150
Voltage, V	400
Power, kW	22
External dimensions, mm	1150x770x1615
Net weight, kg	200
CONFIGURATION	
Loading	left/right
Detergent dispenser	option
Rinse aid dispenser	option
Tank filters	*
Prewash	option
Cold water connection	option
Drying module	option
Heat recovery system	option
Glass rack	*
Dish rack	*
Cutlery container	*

Scotsman
Ice Systems

Scotsman

İtalya istehsalı

Model	Scotsman EC 206
Dimensions (W x D x H)	1250 x 622 x 809 mm
Max production / 24hr	130 Kg
Storage bin capacity	50 Kg
Cube size(s)	Small 8g, Medium 20g, or Large 39g
Unit weight (net)	84 Kg
Water consumption (A)	10.8 Litres/hr
Energy consumption (A)	18.1 kWh/24hr
Refrigeration	R452A
Voltage	230v / 50hz / 1ph
Fuse / CB rating	16 amps
Recommended water filter	3M HF60-S

Model	Scotsman EC 46
Production Capacity (Kg)	24 kg
Storage Bin Cover.	9kg
Dimensions (WxDxH) mm	46 x 67 x 76 cm
Electrical Connection	230/50/ 1 Phase
Electricity Consumption (kW)	0.23 kW
Cooler	R404A
Weight (Kg)	44kg

Scotsman
Ice Systems

Model	Scotsman AF 103 AS
Ice type	granular ice
Performance	108 kg/day
Type of water supply	water supply and drainage required
Ice storage	with bunker
Hopper capacity	30 kg
Cooling	air
Voltage	220 V
Width	592 mm
Depth	622 mm
Height	from 997 to 1078 mm
Weight (without packaging)	66 kg
Weight (with packaging)	74 kg

Scotsman
Ice Systems

Hamilton Beach

Hamilton Beach COMMERCIAL

Amerika istehsalı

Bar Blenders

Mode	HBB908	HBH950
Power, kWl	400	400
Voltage, V	230	220-240
External dimensions, mm	165x203x388	216x285,6x445
Net weight	3,2	11,1

Expeditor

Model	HBH500
Power, kWl	400
Voltage, V	120
External dimensions, mm	216x285,6x445
Net weight	5.1

Juicer

Model	HCJ967
Power, kWl	400
Voltage, V	120
External dimensions, mm	216x285,6x445
Net weight	13.6

Kitchen Equipment

Model	CPM800	HMI200	HSV1000
Power, kWl	1.5	175	1200
Voltage, V	120	120	220
External dimensions, mm	350 ×450×400	76×76×445	140x210x375
Net weight	25	1.9	1.8

Hamilton Beach

PINTINOX

PINTINOX

İtalya istehsalı

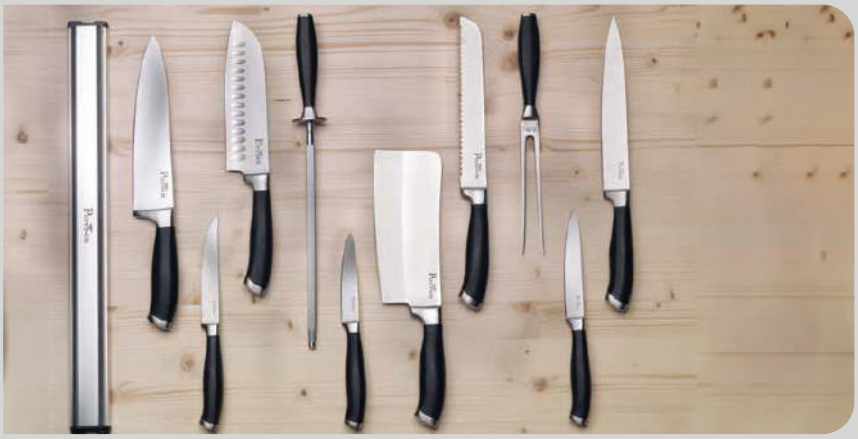

CUTLERY

Besteck
A broad selection of classic, modern and chic cutlery. Our ranges of stainless-steel cutlery are available in many colours and are designed to last over time. Explore them all!

COOKING

Garen
Pots, pans and saucepans for all your culinary exploits. A whole host of solutions to speed up food preparation. Get inspired

PINTINOX

COOK
IN SHO
B.PRO
CATERING SOLUTIONS
BUILD YO
COOK IN
14
D
21
WIESH

B.PRO

CATERING SOLUTIONS

B.PRO
CATERING SOLUTIONS

B.PRO
CATERING SOLUTIONS

Almaniya İstehsalı

SMART

B.PRO BASIC LINE Smart equipment variant: This variant focuses on cost efficiency while putting function at the top of the priority list.

Are you looking for greater food quality, more flexibility and creative freedom to design ambiance for serving your food?

Anyone who finds the price-function ratio important is in excellent hands with the BASIC UNE Smart equipment variant. It is the perfect basic configuration. Its modules meet aJI functional requirements for accomplisl1ed food presentation with no compromises on quality.

This variant is designed for short planning times and a long service life. It features modules for all needs: hot buffets, cold buffets, plain buffets, roll- in and servery counters, corner modules, a cash register booth, a soup station and different showcases. You'll receive all modules in a 3x or 4x GN 1 /1 format or with customised dimensions, suitable for setting up individually or in a line, against a wall or as free-standing units. All modules are produced to top B.PRO quality standards.

B.PRO BASIC LINE W-3, hot buffet,
Smart equipment variant
Standard configuration:

- Mobile hot buffet with body in traffic grey B (RAL 7043)
- Stainless steel top surface with three individual wet- or dry-heated bain-maries for GN 1/1, 230 V connection
- Bridge attachment in stainless steel
- Customer-side sneeze guard made of toughened safety glass
- 4 twin steering castors, 2 of which have brakes

Bridge attachment and sneeze guard
The optimised bridge attachment comes in a slimmer design, allowing diners a better view of foods. The extended toughened safety glass sneeze guard has a pass-through height of 280 mm. It can also extend down to the top surface as an option.

New: elegant body colour
The new standard body colour traffic grey B (RAL 7043) adds elegance and blends into almost any surroundings. The contrast with the stainless steel of the top surface and bridge attachment is particularly striking.

Flexible and mobile
Four steering castors with twin tyres allow modules to be quickly and easily manoeuvred or re-arranged for an event. You can securely lock the module into position with the two brakes fitted as standard.

Optional: radiant heaters and lighting
Energy-efficient ceramic infrared heaters focus their heat on foods while the bridge attachment remains cool. State-of-the-art LED technology provides uniform lighting, placing foods under a warm or cold light as required. Both options can be configured separately.

Optional: tray slide in stainless steel, **round tube**
Time-tested: the fold-down stainless steel round tube tray slides are sturdy and practical. Shelves in the same design can also be attached at the same height on the short sides.

Optional: plate slide in stainless steel with smooth surface
The stainless steel plate slides feature a smooth surface, are flush with the top surface and can also be folded down. Added short-side shelves provide extra storage options.

B.PRO BASIC LINE W-3, hot buffet,
Design equipment variant
Standard equipment:

- Mobile hot buffet with body in traffic grey B (RAL 7043)
- Stainless steel top surface with three individual wet- or dry-heated bain-maries for GN 1/1, 230 V connection
- 4 twin steering castors, 2 of which have brakes
- \+ Front panelling on customer side, faced with Rustic Oak Resopal laminated sheet material
- \+ Customer-side tray slide, faced with Rustic Oak Resopal laminated sheet material
- \+ Highline bridge attachment in stainless steel with customer-side sneeze guard made of toughened safety glass

Highline bridge attachment
The elegant Highline bridge attachment – here with a customer- and operator-side sneeze guard – offers more storage surface and an even better view. GN containers can be replaced even more easily thanks to the greater pass-through height.

Resopal front panelling
For greater variety in colour and material combinations: the front panelling consisting of a wooden panel, faced with Resopal laminated sheet material, available in about 200 different "Colours" or "Woods" Resopal decors.

Resopal tray slides
The fold-down tray slides are made of plywood and faced with Resopal laminated sheet material. Metal rails for trays prevent wear. The corners are neatly rounded off on the customer side.

Optional: Resopal shelf, short side
Fold-down shelves can also be attached at the same height as the tray or plate slide to provide even more storage options.

Optional: adjustable feet with skirting panels
If you're planning to install your B.PRO BASIC LINE permanently, there are stainless steel adjustable feet and skirting panels to provide a hygienic, clean-cut finish with the floor.

Optional: B.PRO BASIC LINE in line
Mobile and fixed modules can be easily and firmly interconnected using module connector sets. Finished in the chosen colour for the body, a profile panel covers the gap between modules.

COOK I-flex

Compact and efficient: The cooking station with infinite possibilities

With its efficient, fully integrated induction technology with up to three hobs, B.PRO COOK I-flex guarantees maximum flexibility. A wide range of cooking inserts can be positioned with ease and quickly swapped.

This wide range of cooking equipment means that an equally varied array of food can be prepared to order, directly in front of customers, from dawn to dusk.

Thanks to its compact dimensions and integrated extractor hood, this cooking station can also be integrated in areas with space restrictions. In the mobile to-go version, B.PRO COOK I-flex is also ideal for catering and out-of-house assignments.

COOK classic

Powerful and spacious: the cooking station for maximum performance.

B.PRO COOK classic is one of the sector's most popular time-tested front cooking solutions. The cooking stations for two, three or four highperformance table-top cooking units are ideally equipped for continuous daily service as well as for use at peak times.

With its modular design and wide selection of cooking technology, the range of dishes can be varied every day. New culinary trends are therefore easy to implement.

The integrated extraction bridge efficiently filters grease and odours, ensuring clean air in the dining area. Generously dimensioned work surfaces and storage space as well as coordinated accessories optimise worl<flows for quick and easy preparation.

B.PRO COOK classic 4.1
on operator side, with optional railing, mobile placement table and comprehensive accessories

The front cooking trio for mouthwatering cooking shows:
induction wok, ribbed griddle and pasta cooker.

Deep fryer
with swivelling heating and unheated cold zone at the bottom of the basin.

Deep griddle
can be used flexibly for braising, grilling or cooking.

Extra large griddle

Griddles
ribbed or flat – the seamlessly welded-in griddle achieves a uniform temperature as desired. Excessive grease is collected in the large catch tray. With independently adjustable heating zones, the double-wide griddle offers efficiency at the touch of a button.

B.PRO COOK classic:

Innovative technology that everyone can taste.

Multi-element 1/1

Multi-element 1/1 575 041
made of stainless steel, for preparing and arranging food or storing cooking utensils and ingredients, capacity: max. GN 1/1-65 or its subdivisions,
dimensions: 544 x 330 x 93 mm

Multi-element 1/3 575 042
made of stainless steel, for storing cooking utensils and ingredients,
capacity: max. GN 1/3-65 or its subdivisions,
dimensions: 190 x 330 x 93 mm

Two compartments, two temperature zones – for even more flexibility during transport and temporary storage

- Two separately adjustable compartments with convection heating or as a convection heating/convection cooling or convection heating/neutral combination
- Space-saving combi models with two stacked compartments
- Duo model for large quantities with two side-by-side compartments
- As GN 1/1 models or GN 2/1 banquet models

B.PROTHERM model designations

Number of compartments	Number of ledges	Number of ledges, convection-cooled models	Compartment arrangement	Compartment design	Model
2 x = 2 compart-ments	12 16 18 24 30	16 (10) = 10 x 2/1 and 6 x 1/1 30 (24) = 24 x 1/1 and 6 x 1/2 36 (30) = 30 x 2/1 and 6 x 1/1 36 (30) = 30 x 1/1 and 6 x 1/2	combi = stacked duo = side by side	N = neutral H (heated) = convection-heated C (cooled) = convection-cooled H/H = convection-heated/ convection-heated H/N = convection-heated/neutral	banquet = banquet trolley for GN 2/1

B.PRO
CATERING SOLUTIONS

retigo®

B.PRO
CATERING SOLUTIONS

retigo®

Çexiya istehsalı

BESTSELLER

Blue Vision

B611 i

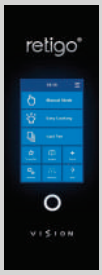

	B 611 i	B 611 b	B 611 ig*
Model	H14-0201-IA	H14-0202-IA	H14-0203-AA
Technical specification	2E06111A	2E0611BA	2G06111A
Capacity	7 x GN 1/1	7 x GN 1/1	7 x GN 1/1
Capacity of meals	51 - 150	51 - 150	51 - 150
Spacing	65 mm	65 mm	65 mm
Dimensions (w x h x d)	933 x 786 x 821 mm	933 x 786 x 821 mm	933 x 786 x 821 mm
Weight	116 kq	122 kq	127 kq
Total power	10,9 kVt	10,9 kVt	0,74 kVt
Heat power	10,3 kVt	10,3 kVt	13 kVt
Steam generator power	-	9 kVt	-
Fuse protection	16 A	16 A	10 A
Voltage	3N~/380-415V/50-60 Hz	3N~/380-415V/50-60 Hz	1N~(2~)/220-240V/50-60Hz
Noise level	70 dBA	70 dBA	70 dBA
Water/Drain connection	G 3/4" / 50 mm	G 3/4" / 50 mm	G 3/4" / 50 mm
Gas connection	-	-	G 3/4"
Temperature	30 - 300 °C	30 - 300 °C	30 - 300 °C

BESTSELLER

Blue Vision

*COMBI OVEN 1221 I B IG**

	B 1221 i	B 1221 b	B 1221 ig*
Model	H14-0401-IAH	14-0402-IAH	14-0403-AA
Technical specification	2E1221IA	2E1221BA	2G1221IA
Capacity	12 x GN 2/1 1	2 x GN 2/1	12 x GN 2/1
Capacity of meals	400 - 600	400 - 600	400 - 600
Spacing	65 mm	65 mm	65 mm
Dimensions (w x h x d)	1111 x 1343 x 961 mm	1111 x 1343 x 961 mm	1111 x 1343 x 961 mm
Weight	210 kq	220 kq	229 kq
Total power	36,9 kVt	36,9 kVt1	,28 kVt
Heat power	36 kVt	36 kVt	45 kVt
Steam generator power	-	33 kVt-	
Fuse protection	63 A	63 A1	0 A
Voltage	3N~/380-415V/50-60 Hz	3N~/380-415V/50-60 Hz	1N~(2~)/220-240V/50-60 Hz
Noise level	70 dBA	70 dBA	70 dBA
Water/Drain connection	G 3/4" / 50 mm	G 3/4" / 50 mm	G 3/4" / 50 mm
Gas connection	--G		3/4"
Temperature	30 - 300 °C	30 - 300 °C	30 - 300 °C

BESTSELLER

Blue Vision

COMBI OVEN B 2011 I, B, IG

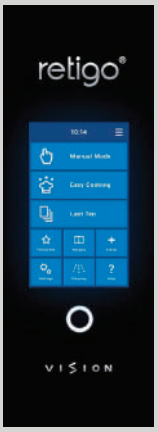

	B 2011 i	B 2011 b	B 2011 ig*
Model	H14-0501-IAH	14-0502-IAH	14-0503-AA
Technical specification	2E2011IA	2E2011BA2	G2011IA
Capacity	20 x GN 1/1	20 x GN 1/1	20 x GN 1/1
Capacity of meals	400 - 600	400 - 600	400 - 600
Spacing	63 mm	63 mm	63 mm
Dimensions (w x h x d)	948 x 1804 x 834 mm	948 x 1804 x 834 mm	948 x 1804 x 834 mm
Weight	235 kq	245 kq	257 kq
Total power	37 kVt	37 kVt1	,28 kVt
Heat power	36 kVt	36 kVt	45 kVt
Steam generator power	-	33 kVt	-
Fuse protection	63 A	63 A1	0 A
Voltage	3N~/380-415V/50-60 Hz	3N~/380-415V/50-60 Hz	1N~(2~)/220-240V/50-60 Hz
Noise level	70 dBA	70 dBA	70 dBA
Water/Drain connection	G 3/4" / 50 mm	G 3/4" / 50 mm	G 3/4" / 50 mm
Gas connection	--G		3/4"
Temperature	30 - 300 °C	30 - 300 °C	30 - 300 °C

SMART
INVESTMENT

Demonstrably the lowest power and water consumption, and low-cost automatic cleaning – all in a single machine. All this saves money each and every day and guarantees a great return on investment.

B.PRO
CATERING SOLUTIONS

VISION+

High efficiency, minimal losses
A special 50 mm thick insulation around the cooking chamber combined with triple glazing on the combi oven door ensures a rapid increase in temperature and minimal power consumption during the cooking process.

Water Saving System
A unique waste water system design that requires a negligible amount of water for cooling the exhaust steam. This solution significantly reduces total water consumption.

Advanced Steam Generation System
The integrated heat exchanger utilises the heat from the exhaust steam and significantly reduces demands on electricity.

Active Cleaning
Low-cost cleaning with high efficiency and minimum water consumption demands.

retigo®
COMBI OVEN SPECIALIST

COMBI OVEN

O 611 PLUS I, B, IG*

	O 611 i+	O 611 b+	O 611 ig+*
Model	H14-0261-IA-5H	14-0262-IA-5H	14-0263-AA-5
Technical specification	2E0611IA (viola.2E0611IZ)	2E0611BA (viola. 2E0611BZ)	2G0611IA
Capacity	7 x GN 1/1	7 x GN 1/1	7 x GN 1/1
Capacity of meals	51 - 150	51 - 150	51 - 150
Spacing	65 mm	65 mm	65 mm
Dimensions (w x h x d)	933 x 786 x 821 mm	933 x 786 x 821 mm	933 x 786 x 821 mm
Weight	116 kq	122 kq	127 kq
Total power	10,9 kVt	10,9 kVt	0,74 kVt
Heat power	10,3 kVt	10,3 kVt	13 kVt
Steam generator power	-	9kVt	-
Fuse protection	16 A	16 A	10 A
Voltage	3N~/380-415V/50-60 Hz	3N~/380-415V/50-60 Hz	1N~(2~)/220-240V/50-60 Hz
Noise level	70 dBA	70 dBA	70 dBA
Water/Drain connection	G 3/4" / 50 mm	G 3/4" / 50 mm	G 3/4" / 50 mm
Gas connection	-	-	G 3/4"
Temperature	30 - 300 °C	30 - 300 °C	30 - 300 °C

DM 5

DM 8

Model	DM 5	DM 8
Heat source	Electricity	Electricity
Steam generator	Injection	Injection
Capacity	5 x 600 / 400	8 x 600 / 400
Capacity (optional)	5 x GN1 / 1*	8 x GN1 / 1*
Baking space	1,2 m^2	1,92 m^2
Spacing	85 mm	85 mm
Dimensions (w x h x d)	933 x 786 x 821 mm	933 x 1046 x 821 mm
Weight	116 kg	138 kg
Heat power	10,3 kW	18 kW
Total power	10,9 kW	18,6 kW
Fuse	16 A	32 A
Voltage	3N~/380-415V/50–60Hz	3N~/380-415V/50–60Hz
Water/Drain connection	G 3/4" / 50 mm	G 3/4" / 50 mm
Noise level	max. 70 dBA	max. 70 dBA
Temperature	30–300 °C	30–300 °C

* only with adapters

ACCESSORIES

DELIPROOFER

To speed up the dough leavening process, the specially developed DeliProofer makes a great addition to the DeliMaster. This appliance works independently since it has its own control panel. It is compatible with both DM5 and DM8 sets.

B.PRO CATERING SOLUTIONS

UNOX

B.PRO
CATERING SOLUTIONS

İtaliya istehsalı

BAKERTOP MIND.Maps™ ONE

Model	XEBC-16EU-E1R
Capacity	16 600x400
Pitch	80 mm
Frequency	50 / 60 Hz
Voltage	400 V ~ 3N
Electrical Power	29,3 kW
Dimensions	882x1043x1866
Weight	185 kq

Model	XEBC-10EU-E1R
Capacity	10 600x400
Pitch	80 mm
Frequency	50 / 60 Hz
Voltage	400 V ~ 3N
Electrical Power	14,9 kW
Dimensions	860x957x1163
Weight	130 kq

Model	XEBC-06EU-E1R
Capacity	6 600x400
Pitch	80 mm
Frequency	50 / 60 Hz
Voltage	400 V ~ 3N
Electrical Power	9,9 kW
Dimensions	860x957x843
Weight	100 kq

Model	XEBC-04EU-E1R
Capacity	4 600x400
Pitch	80 mm
Frequency	50 / 60 Hz
Voltage	400 V ~ 3N
Electrical Power	7,4 kW
Dimensions	860x957x675
Weight	85 kq

LEVIN

LEVIN

LEVIN

Rusiya İstehsalı

ALPINA – dual-mode bonet type chest freezer with built-in unit and sliding glass lids.

Excellent visibility and increased loading.

MAIN ADVANTAGES

- Automatic hot gas defrost
- LED backlight
- Low-emissivity glass with anti-fog coating
- Height-adjustable legs

ALPINA		ALPINA 200	ALPINA 210	ALPINA 250
Climate class according		4	4	4
Net volume	L	533	610	733
Display area	m^2	1,16	1,31	1,58
Net weight	kg	150	160	180
Dimensions	mm	1875x870x896	2100x870x896	2500x870x896
Voltage / Frequency	V/Hz	230/50	230/50	230/50
Refrigerant		R290/R404a (option)	R290/R404a (option)	R290/R404a (option)

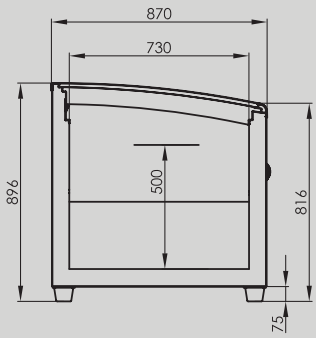

Temperature mode		
Low temperature	°C	-18... -24
Medium temperature	°C	-2... +6

BERG TST

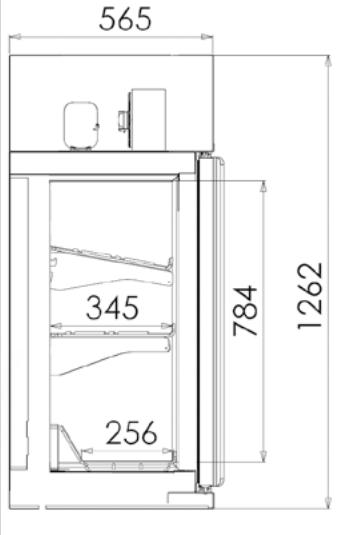

Temperature mode		
Low temperature	°C	-18… -24
Net volume	L	314
Display area	m²	1,3
Net weight	kg	240
Dimensions	mm	1280x580x2330
Voltage / Frequency	V/Hz	230/50
Refrigerant		R290

Inner glass with anti-fogging coating
Low-emission outer glass
Adjustable feet
LED lightening

PLANAI 200

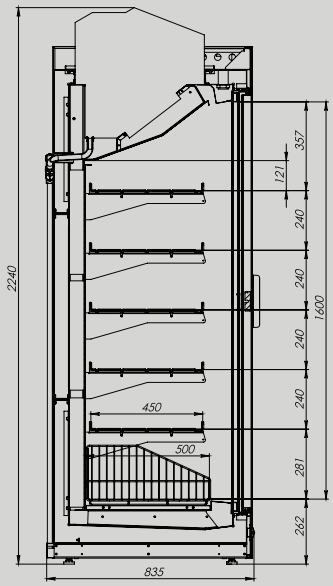

Temperature mode		
Low temperature	°C	-18… -24
Net volume	L	1570
Display area	m²	6,88
Net weight	kg	300
Dimensions	mm	2620x835x2240
Voltage / Frequency	V/Hz	380/50
Refrigerant		R290

Inner glass with anti-fogging coating
Low-emission outer glass
Adjustable feet
LED lightening

CORTINA 200/210/250

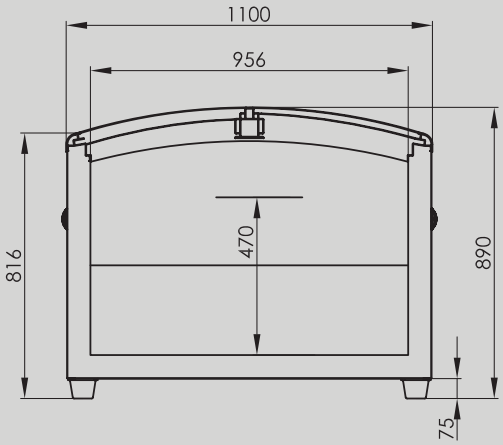

CORTINA		CORTINA 200	CORTINA 210	CORTINA 250
Net volume	L	628	711	876
Display area	m^2	1,55	1,76	2,12
Net weight	kg	170	185	210
Dimensions	mm	1875x1100x890	2100x1100x890	2500x1100x890
Voltage / Frequency	V/Hz	230/50	230/50	230/50
Refrigerant		R290/R404a (option)	R290/R404a (option)	R290/R404a (option)

BERG 250

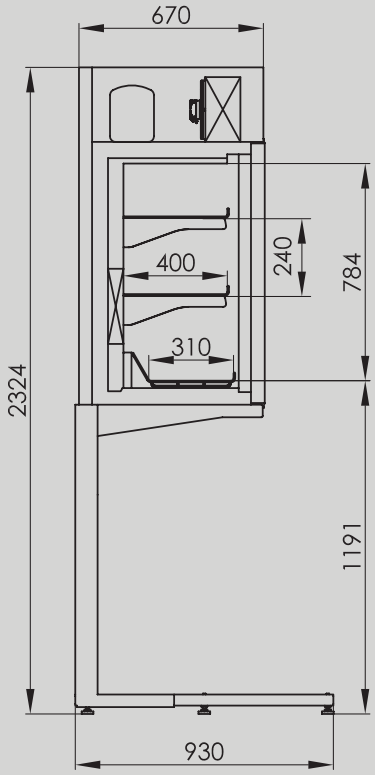

Temperature mode		
Low temperature	°C	-18... -24
Net volume	L	762
Display area	m^2	2,6
Net weight	kg	390
Dimensions	mm	2500x705x2330
Voltage / Frequency	V/Hz	230/50
Refrigerant		R290

LEVIN

robot coupe
R 402
4,5 L

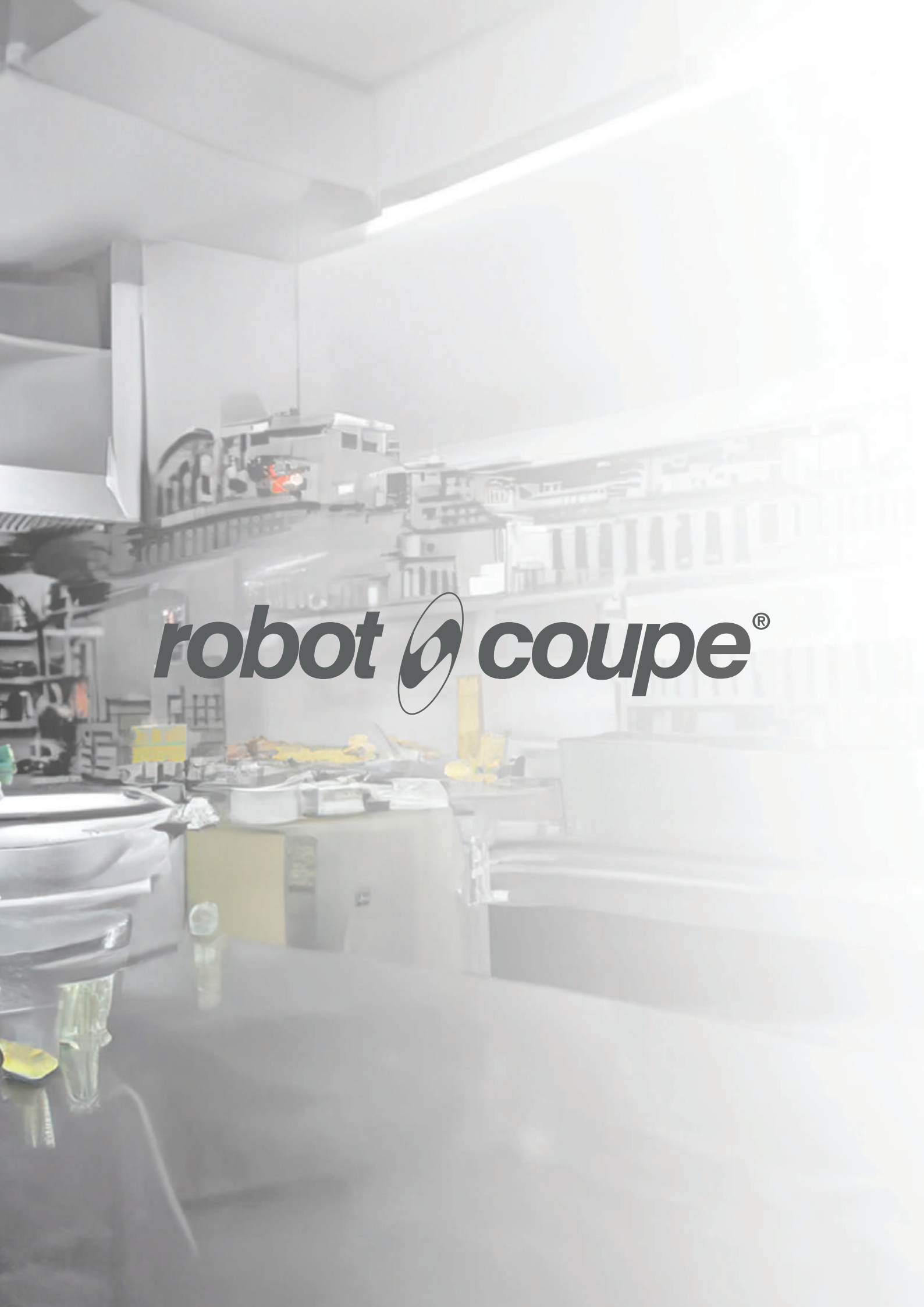
robot coupe®

robot coupe®

Fransa istehsalı

Discover the Robot-Coupe product range.

VEGETABLE PREPARATION MACHINES

most popular table-top model, robust, efficient, easy to clean and offering the widest variety of cuts. Gain consistency and save hours in mise en place: slice, grate, julienne, ripple cut, french fries, dice and even mashed potatoes.

Precision
Round hopper (Ø 2 9/32") For processing long or delicate vegetables (zuchinnis, cucumbers, etc) with flawless cutting precision.

Exclusive Cuts!
Exactitube pusher (Ø 1 17/32"): small fruits and vegetables, chillies, gherkins, pickles, dry sausage, asparagus, spring onions, bananas, strawberries, grapes, etc.

Large Output
Larger hopper for processing bulky vegetables such as cabbage and celery. Can accommodate up to 10 tomatoes at a time.

CL 50 ULTRA

most popular table-top model, robust, efficient, easy to clean and offering the widest variety of cuts. Gain consistency and save hours in mise en place: slice, grate, julienne, ripple cut, french fries, dice and even mashed potatoes.

CL 50 ULTRA RESTAURANTS

The perfect package for Restaurants preparation needs: robust, efficient and easy to clean. Gain consistency and save hours in mise en place. The discs included are ideal for making Eggplant parms, hashbrowns, fruit salads.

CL 50 GOURMET

The unit of choice for exceptional quality of cuts, allowing free range for your imagination. Gain consistency and save hours in mise en place: slice, grate, julienne, ripple cut, french fries, dice. The CL50 Gourmet will even tackle the finest and most delicate tasks like brunoise, waffle cuts or slicing parsley to perfection!

J 80

Single Phase 120 V

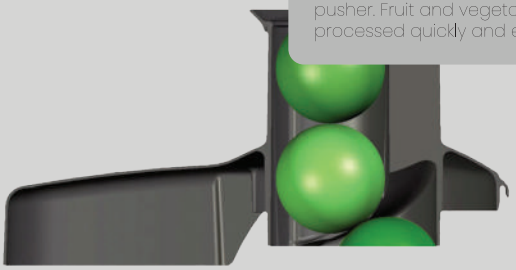

Automatic feed hopper
The exclusive automatic feed system eliminates the need for a pusher. Fruit and vegetables are processed quickly and effortlessly.

Stainless steel for durability
Motor base and bowl made of stainless steel and designed for easy cleaning and a long lifespan

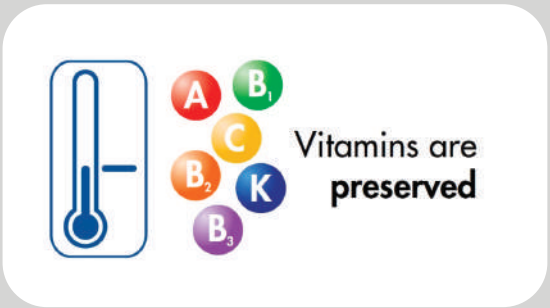

Powerful and quiet
1.3 HP quiet industrial motor specially designed for busy environments (juice bars, supermarkets, etc.).

J 100

Single Phase 120 V

robot coupe

PACO
JET
2 PLUS
WHEN COOKING BECAME SWISS.

PAGO
JET

Isveçrə istehsalı

Pacojet - Pacojet 2
Pacojet, electric
Discover the magic of Pacotizing with the Pacojet 2. Pacojet 2 is the next generation kitchen machine that elevates ordinary cooking to culinary excellence. Pacotizing enables chefs to 'micro-purée' fresh, frozen foods into ultralight mousses, naturally fresh ice creams and sorbets or aromatic soups, sauces or fillings without thawing.

Intensive flavors, natural colors and vital nutrients are captured in individual, ready-to-serve portions.

international Pacojet 2 recipe book

PACO
JET
PACO
JET
2PLUS

VESTA

VESTA

Russiya istehsalı

ARGENTINA
Open Grill

This grill is an analogue of the Argentinean grill from America made for severe conditions of Russia. Cooking temperature is adjusted by changing the level of the fire. Two types of fire grates are available: a V-shaped (inclined) grate or a horizontal (bars) grate. Firebricks are supplied by the user.

Smoker “VESTA K”

Following up on our motto, «We produce our equipment for making healthy food in a traditional way», we offer you smoker “VESTA K”. Smoker “VESTA K” is an equipment working on charcoal (firewood) and, if its fryer is replaced by an electric or gas burner, it is fed by electricity or by gas.
This smoker is easy to use, and makes good products.
The smoker has a “chamber-in-chamber” that separates the space where the products are made from the fire place.
The chamber is heated from all the sides at the same time.
burning gases from coal do not mix with smoke.
Due to a separable chamber control, smoke is locked inside the smoking chamber throughout the entire product smoking cycle.
The main advantages of our smoker are chip saving, smoke concentration control and independent temperature control parameters.`

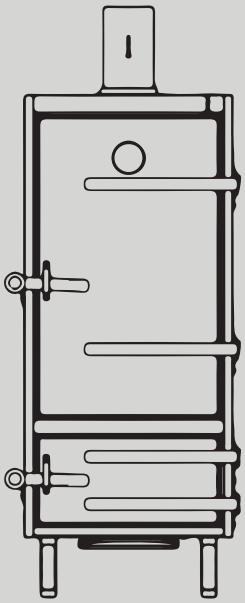

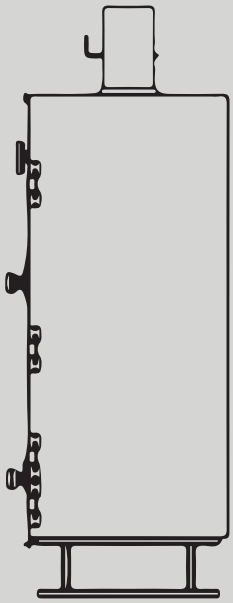

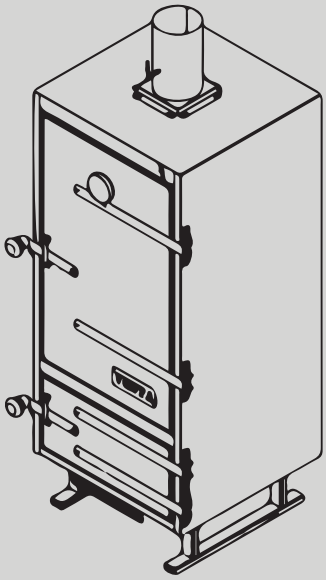

The VESTA Dagrill 70G

CHARCOAL GRILL OVEN

Areas of use:
Grilling

Peculiarities:
Meat yield kg/hour: 65
Seats: 100
Coal consumption (per day) kg: 10-12
Maximum coal loading kg: 4
Exhaust capacity m3/hour: 2800
Ignition time min: 30

Equipment:
Pipe with top damper – 1 pc.
Frying grates – 2 pcs 580x552 mm
Tray for collecting fat – 1 pc.
Poker – 1 pc.
Tongs – 1 pc.

Options (to be ordered separately):
Dry spark arrestor (cap)
Table stand 70
Spark arrester with water curtain assembled with heating cabinet

VESTA

LOW
WARNING

WARING COMMERCIAL

WARING

Amerika istehsalı

- Vinyl lid for hot and cold food/beverage blending
- Removable center cap to feed ingredients while blending
- Heavy-duty stainless steel blade with solid steel blending assembly - built to last but completely user-replaceable
- Aggressive blade design works in concert with the wide jar base to draw maximum amount of product into the vortex
- Heavy-duty motor- high-performance 2 HP, 2-speed motor, with 24,000 max RPM. Recommended for 50-7 4 cycles per day, and blends three 16 oz. margaritas in 8 seconds or less

Limited Two-Year Warranty

MODEL	CONTROL PANEL	CONTAINER
TBB145	Classic toggle switch with HI, LOW and PULSE functions	48 oz. Copolyester
TBB145P6		64 oz. Copolyester
TBB145S4		48 oz. Stainless Steel
TBB145S6		64 oz. Stainless Steel
TBB160	Electronic keypad with HI, LOW and PULSE functions and 60-second countdown timer	48 oz. Copolyester
TBB160P6		64 oz. Copolyester
TBB160S4		48 oz. Stainless Steel
TBB160S6		64 oz. Stainless Steel
TBB175	Variable speed dial control and PULSE functions	48 oz. Copolyester
TBB175P6		64 oz. Copolyester
TBB175S4		48 oz. Stainless Steel
TBB175S6		64 oz. Stainless Steel

Variable speed control for back-of-the-house kitschen applications.

TB B1 75

CAC139
48 oz. copolyester container

CAC89
64 oz. copolyester container and jar pad

CAC152
48 oz. stainless steel container

CAC167
64 oz. stainless steel container and jar pad

CAC139-10
48 oz. BPA-free purple copolyester container

2-Quart Compressor Ice Cream Maker
WCIC20

- 2-quart capacity ice cream maker
- Built-in compressor means no pre-freezing required
- Make up to 2 quarts of ice cream, frozen yogurt or gelato in as little as 30 minutes
- Easy-to-clean stainless steel exterior, LCD display and capacitive touch controls
- "Keep Cool" feature holds ice cream at the optimal temperature when process is finished

120V, 180W, 5-ISP@
Limited One-Year Warranty
cETLus. NSF

WCIC20LID
See-through batch bowl and "mix-in" lids

WCIC20PDL
Mixing paddle incorporates just the right amount of air

WCIC20BWL
Removable aluminum batch bowl

"Mix-ins" combine easily without interrupting the process

Removable batch bowlfor easy cleaning

7" Light-Duty Quik Stick Immersion Blender
WSB33X

MAIN FEATURES

- Newly designed, all-purpose stainless steel blade
- 2-speed, high-efficiency motor
- 7" fixed shaft
- Lightweight and compact
- Perfect for all light-duty commercial applications
- 3-gallon, 1 2-quart capacity
- Limited One Year Warranty

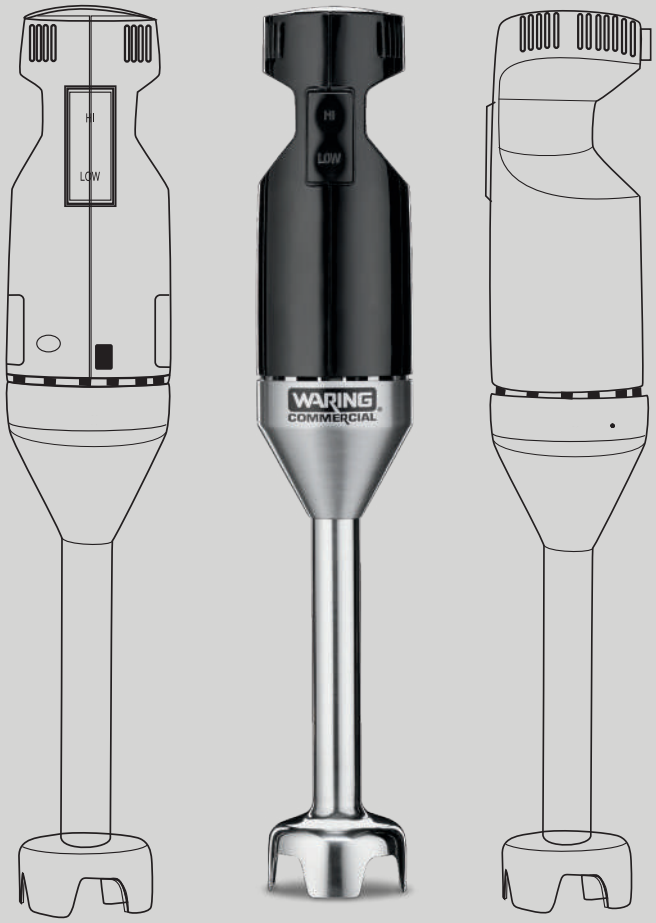

ELECTRICAL

Voltage: 120

Frequency: 60Hz

Watts: 100

Amps: 8

Plug Type: NEMA 5-15P

Cord Length: 6 feet

c UL us NSF

MX1500XTX

Programmable Hi-Power Blender with Sound Enclosure and 64 oz., BPA-Free Copolyester Container

*Made in USA with US and foreign parts.

ELECTRICAL

Voltage: 120

Frequency: 60Hz

Watts: 1500

Amps: 12.5

Plug Type: A

Cord Length: 6 feet

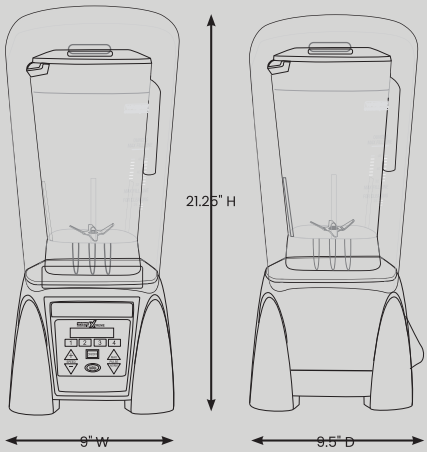

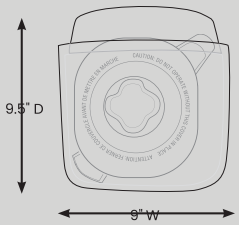

COMMERCIAL MICROWAVE OVENS

MEDIUM-DUTY .9 CUBIC FEET & HEAVY-DUTY 1.2 CUBIC FEET

WMO90

- 10 programmable memory pads; 100 programmable settings
- Stainless steel construction
- Cleanable/replaceable air filter (WMO120 only)
- Stackable (WMO120 only)
- 3-stage cooking
- 5 power levels
- Programmable and manual operations
- Touch control keypad with Braille
- Interior oven light
- 60-minute max cook time
- WMO90 – .9 cubic feet, 120V, 1000W

60-Minute Max Cook Time

10 Programmable Memory Pads; 100 Programmable Settings

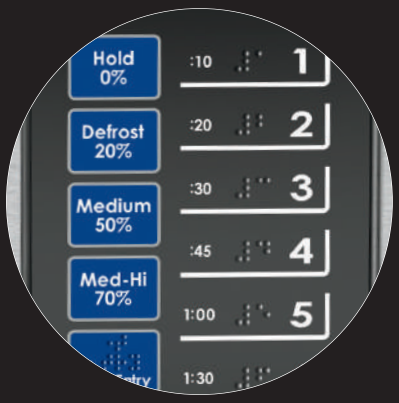

Touch Control Keypad with Braille

Intertek

c UL us

QUART PLANETARY MIXER **WSM7L**

Model	WSM7L
Width	9.3 in
Height	17.7 in
Depth	16.3 in
Capacity	7 qt
Plug Type	5-15
Cord length	6 ft
Voltage	120V
Approvals	cETLus, NSF
UPC	040072087844
Amperage	4.2A
Wattage	350W
Frequency	60Hz

POWERFUL
Heavy-duty, ½ HP motor
WARING
WARING COMMERCIAL

FAGOR PROFESSIONAL

Foodservice

Laundry

FAGOR

End result

Real block configuration example

Side A
KORE 900

MODELO	DESCRIPCIÓN	CANTIDAD
On worktop		
EN-905	1/2 Module neutral element	1
CP-E910	Pasta cooker	1
EN-910	1 Module neutral element	1
C-G940 LPG	4 burners gas cooker	1
Under worktop		
MB-905	1 Module stand	2
CCP9-2G	Refrigerated stand with doors	1

Side B
KORE 700

MODELO	DESCRIPCIÓN	CANTIDAD
On worktop		
F-E7115	Fryer	1
EN-7025	1/4 Module neutral element	1
FT- E7125	Smooth & chromed fry-top	1
EN-705	1/2 Module neutral element	1
C-I745	4 cooking areas induction	1
Under worktop		
MB-715	1.5 Module stand	1
CCP7-2G W	Refrigerated stand with drawers	1

Verticality

MODELO	DESCRIPCIÓN	CANTIDAD
S2	Support with tap	2
R	Rack	1
LAT	Side-finishes	2

Summary

DESCRIPTION	DIMENSIONS (mm)	€
KORE Monoblock 900/700, 3.5M	2.980 x 1760 x 900	-

KORE Monoblock

A unique solution for your kitchen

KORE Modular

Wide variety and maximum quality

FAGOR

1.5
FAGOR

It will be possible to interact with the machine in order to carry out the necessary actions for this type of product, such as:

- Machine Configuration
- Turn on/off machine and light
- Launch defrost

Specific graphs designed for the analysis of refrigeration equipment:

- States
- Alarms
- Compressor active hours
- Status of Doors

Detail data relevant to the refrigeration equipment will be displayed. In this way, the status of this type of equipment can be correctly monitored:

- Compressor ON
- Temperatures (chamber, evaporator, condenser)
- Duration of defrosting.
- Condition of the doors.
- Activation of the fans.
- Active alarms

FAGOR

FAGOR

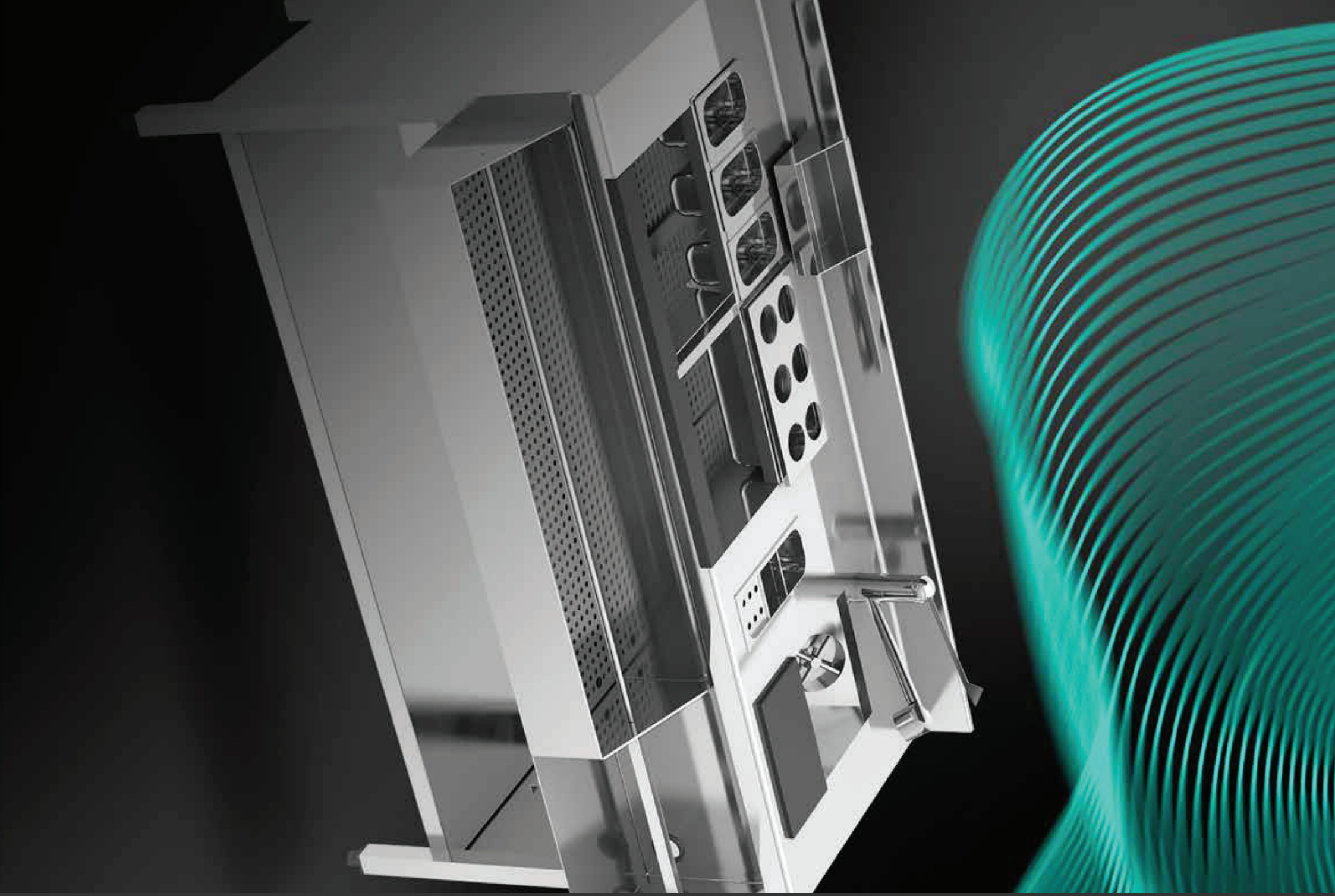

FAGOR

Intercold

Intercold

Russiya istehsalı

Intercold MSM 588 FT

- **Medium temperature:** -5 to +5 °C;
- **Voltage:** 380V;
- **Power consumption** 4.7 kW
- **Gross weight:** 310 kg;
- **Packaging dimensions:** 1250x750x1125/2250x750x775

BLAST FREEZING CABINET INTERCOLD ШСМ 725 К

Nominal consumption, kW : 3.0

Compressor : Tecumseh

Overall dimensions of the external unit, mm : 910x730x2300

Net weight, kg : 300

Baking trays : 1/1x1" 530x325x25[811-20] -20 pcs.

Intensive freezing 70 min, kg (dumplings) : 20

Intensive freezing 70 min, kg (peas) : 18

Moderate freezing 240 min, kg (dumplings) : 80

Moderate freezing 240 min, kg (peas) : 70

Electrical network parameters, Vol/Hz/Ph : 380/50/3

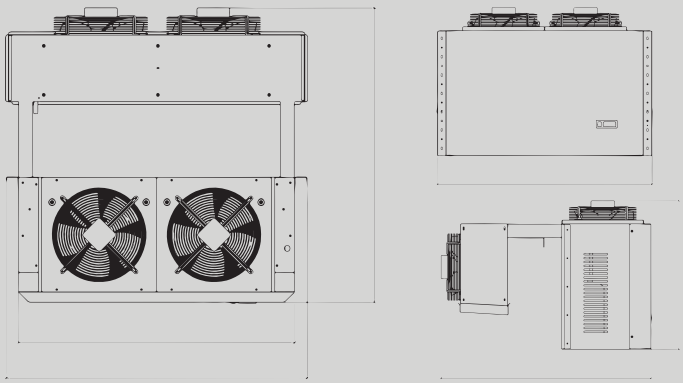

MMCM 462FT

- **Medium temperature:** -5 to +5 °C;
- **Voltage:** 380V;
- **Power consumption** 4.7 kW
- **Gross weight:** 200 kg;
- **Packaging dimensions:** 1450x1200x775

* – the jet range depends on the loading conditions of the chamber, its parameters and the location of the air cooler.
Standard composition of the unit:
1. An external unit with an installed compressor, a microchannel condenser, and an axial fan for blowing the condenser.
2. Control panel with controller and power unit
3. Air cooler with aluminum housing with installed heating elements and fans

CCB335 ZBD57

-digital scroll compressor;
-control panel with controller and power unit;
-crankcase heating;
-performance adjustment via solenoid valve;
-the suction and heating lines are equipped with a solenoid valve;
-refrigerant receiver with shut-off valves with safety valve;
-overcurrent protection system;
-system against phase loss, phase imbalance of the supply network;
-one soundproofing layer;
-R404a refrigerant is used.

- **Medium temperature:** -5 to +5 °C;
- **Voltage:** 220V;
- **Power consumption** 12.89 kW
- **Gross weight:** 310 kg;
- **Packaging dimensions:** 1352x640x1434

Intercold CCB335 ZBD57 is a compressor-condensing unit designed to equip refrigeration chambers in public catering establishments, retail outlets, and warehouses. The design uses a plate-tube type capacitor. The body is made of painted metal.

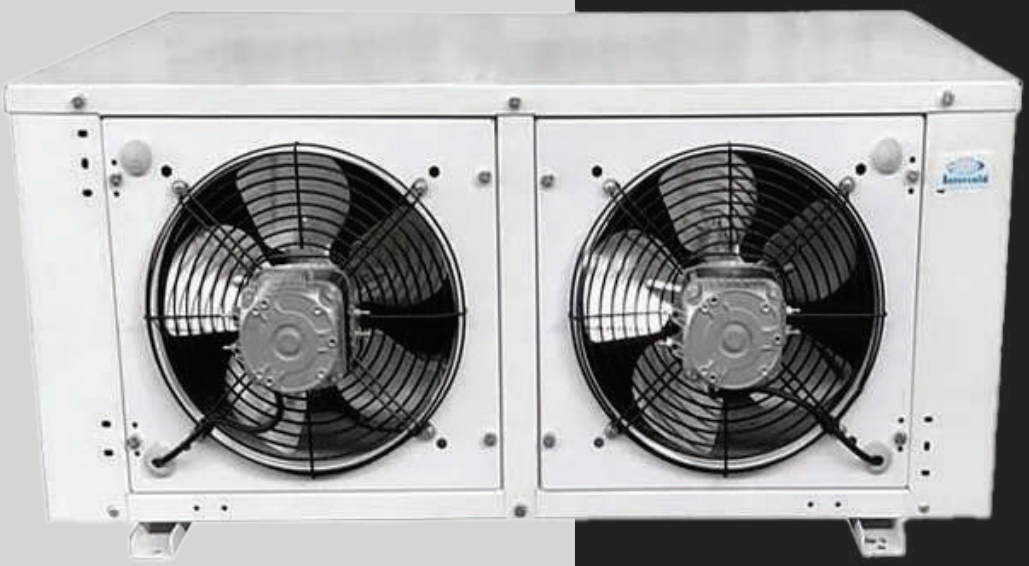

LCM 210 FT Evolution

- **Medium temperature:** -25 to -15°C;
- **Voltage:** 220V;
- **Power consumption** 12.89 kW
- **Gross weight:** 129 kg;
- **Packaging dimensions:** 1150x1200x625

The medium-temperature split system Intercold LCM 210 FT Evolution is designed for cooling and maintaining the required temperature in the internal volume of refrigeration chambers at food industry enterprises. The model consists of 2 blocks: external and internal.

Outdoor unit:

Hermetic compressor
Plate-tube capacitor
Axial blower fan

Indoor unit:

Evaporator
Fan
Evaporator defrost heating element

Infrico

5.0
Infrico

AN 904 T/F

AN 401 CR

AN 401 T/F

AN 902 BT

Digital control IP65

Infrico

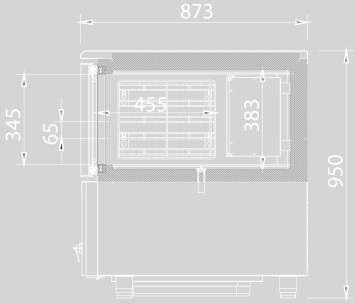
873
345
65
455
383
950

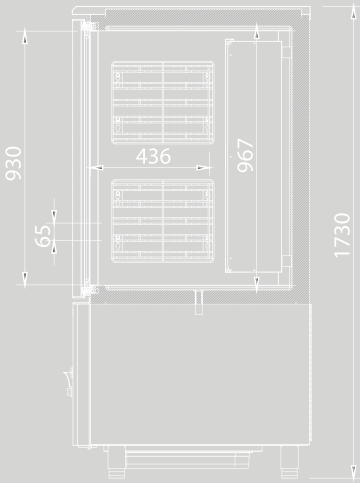
930
436
967
65
1730

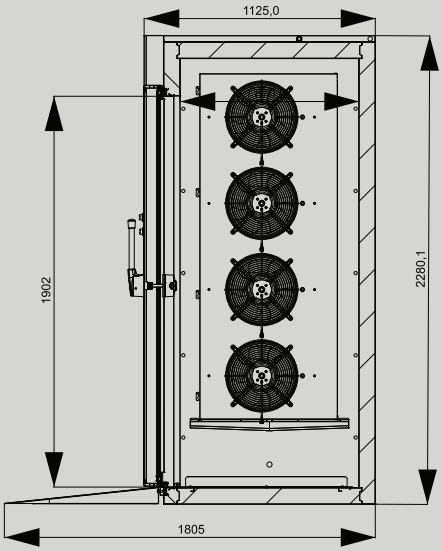

infrico

Cavas & Dry Aging

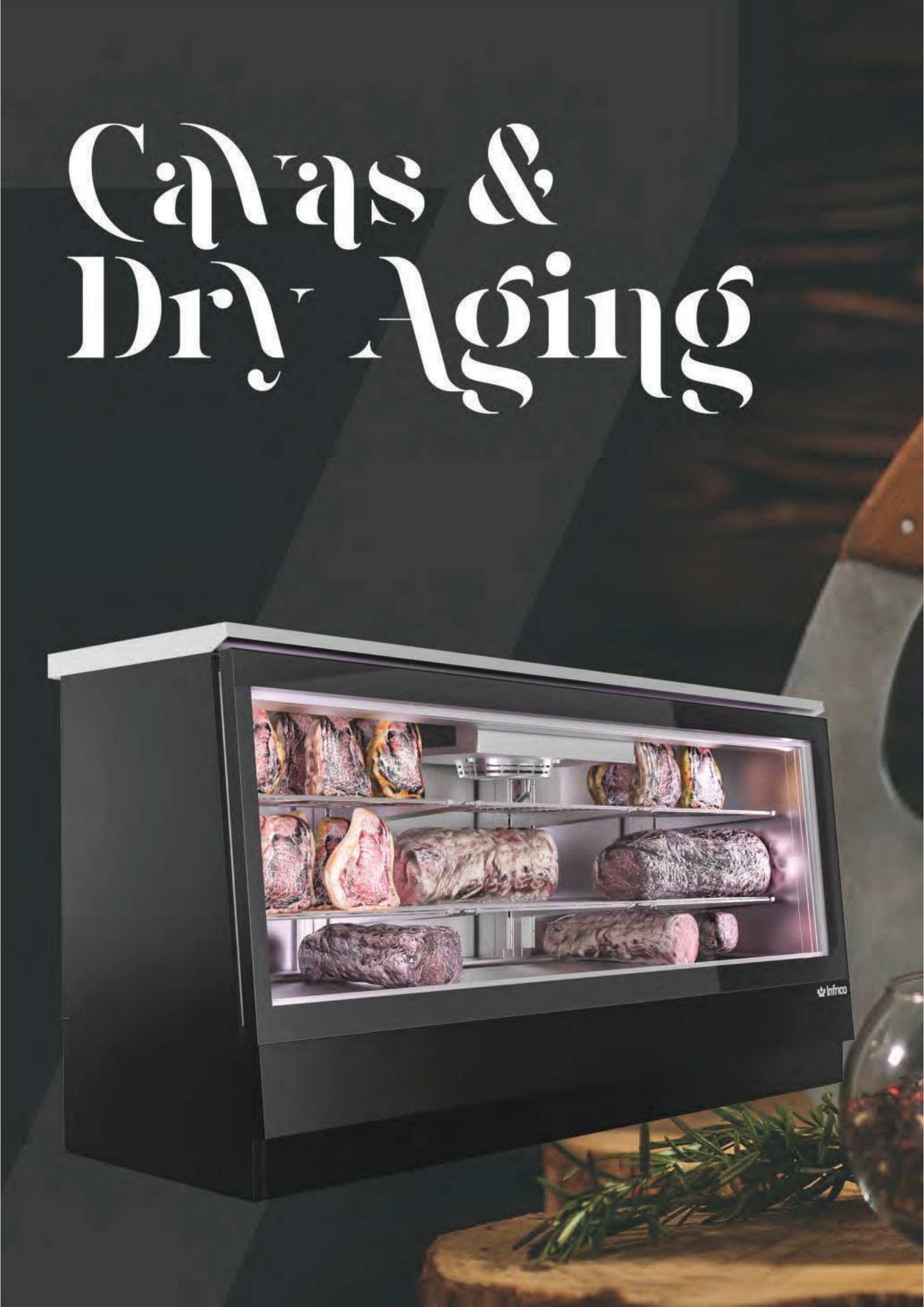

Infrico

AN SC

AN SC 212-213

AGB MDA

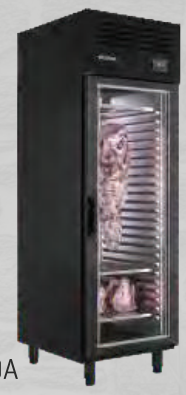

AGB MDA
AGB MDAB 214-215

VC MDA

VC MDA
VC MDAB 216-217

AC MDAB

AC MDAB 218-219

AMC

AMC L
AMC XL 220-221

VITRA V

LO V 224-225

EVV/VINTAGE

EVV
EVV MX
EVV RG 226-227

MODULAR

228-229

infrico

Serie / Series / Série

VMD
Madrid

Serie / Series / Série

VBC
Barcelona

Serie / Series / Série

VEX
Experience

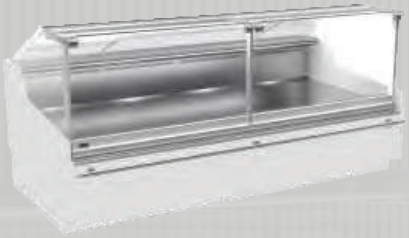

Serie / Series / Série

VEE
California

Serie / Series / Série

Visión

Serie / Series / Série

GD/COMBI

SMDG
SMPB
Edimburgo

SMDCP
Dublín

SMP
Glasgow

VEG
Elegance

BIGGIE

MDCP
Rotterdam

MP
Munich

MSBA Oporto
MSDCBA Orleans

MDR
Rimini

infrico

VGL
Glace

VNZ
Niza

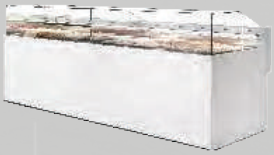

VLY
Lyon

VBR
Ámbar

VON
Ónix

VCO
Combo

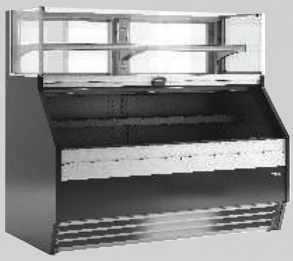

VMG
Magnus

VCB
Coral

VAR
Aries

VBZ
Ibiza

B-Qube Series: Solid square cube

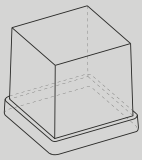

23 gr
32.5x31.5 mm

	FHC30BQAHC FHC30BQWHC	FHC35BQAHC FHC35BQWHC	FHC40BQAHC FHC40BQWHC	FHC45BQAHC FHC45BQWHC	FHC65BQAHC FHC65BQWHC	FHC90BQAHC FHC90BQWHC
Measures (mm) ↔ ↗ ↕	390 460 690	497 592 687	497 592 687	500 580 800	738 600 920	738 600 1020
	-	Medidas sin patas / Measurements without legs / Dimensions sans pieds				
Electrical data (V/Hz)	220V-240V/50Hz					
Material	AISI 304					
Condensation	Air / Water					
Cubes (gr)	23					
Production (Kg/24h)	29	38	42	48	72	90
Warehouse (Kg.)	9	16	16	25	40	55
Power (W)	320	340	455	450	620	890
Refrigerant	R290					
Optional	-					

PHARMACARE

Infrico medcare

EVAPORACIÓN CON AIRE FORZADO

- Enfriamiento uniforme de la cámara.
- Rápida recuperación después de la apertura de la puerta.
- Mejor control de la humedad interior.

FORCED-AIR EVAPORATOR

- Uniform cooling.
- Quick recovery after door opening.
- Better internal humidity control.

Disponemos de un laboratorio propio con cámara climática, dedicado a los ensayos de nuestros equipos

We have our own laboratory with a climatic chamber, dedicated exclusively to test our equipment.

Infrico
Infrico
Infrico

LABCARE

-86 ❄

infrico

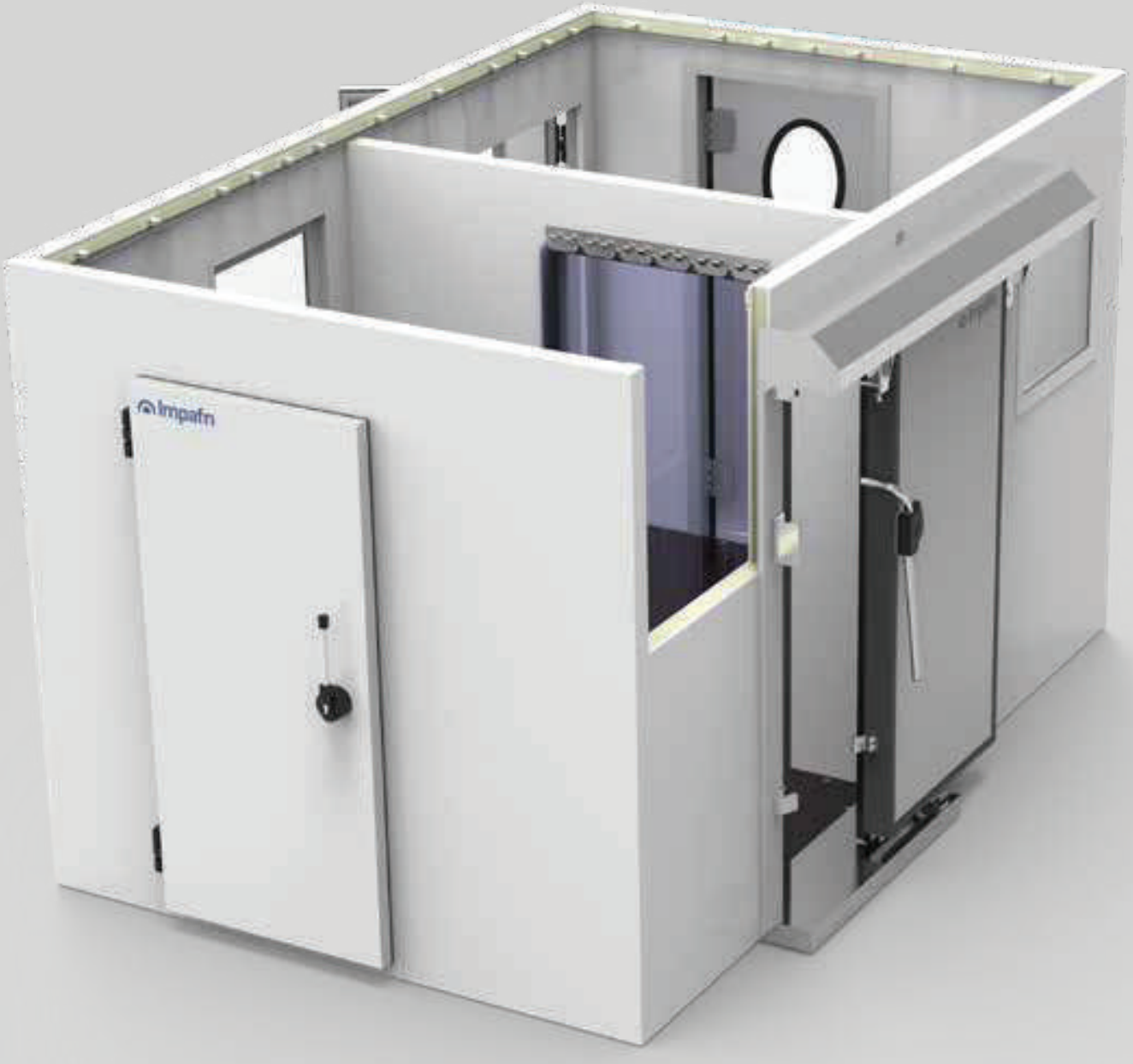
Impafri

Impafri

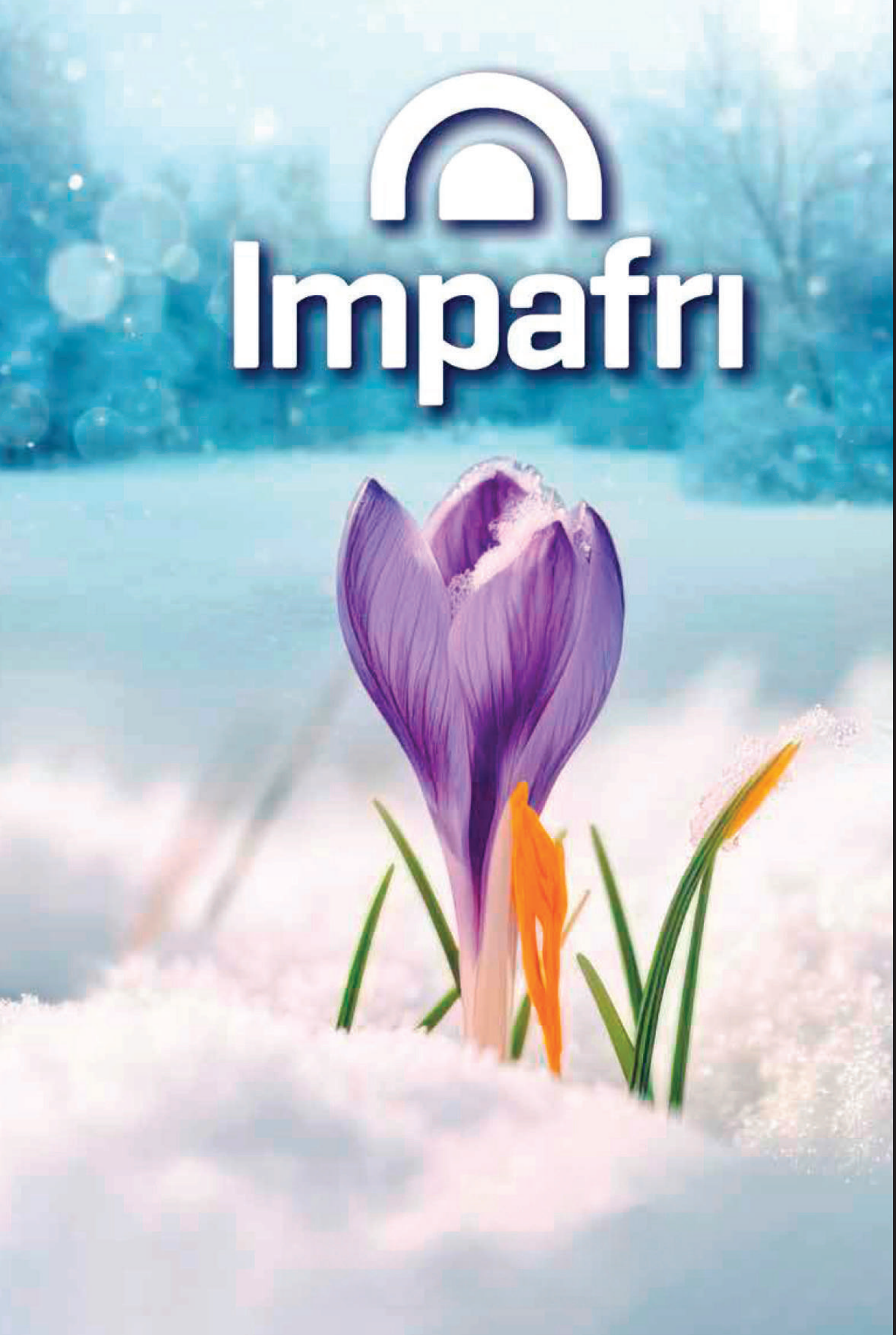

Infrico

Impafri
Impafri

Impafri

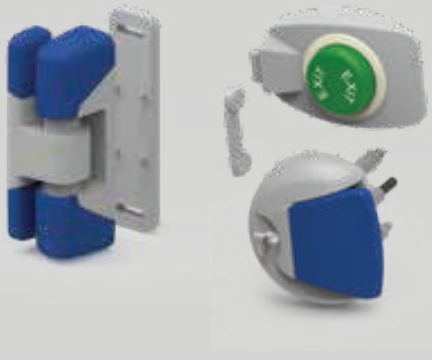

Impafri

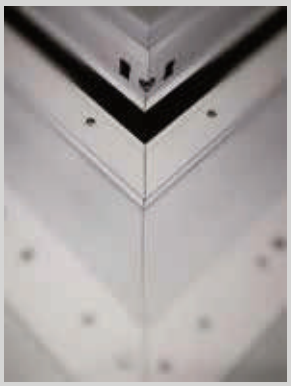

Impafm

Impafm

Impafri

Impafri

Impafri

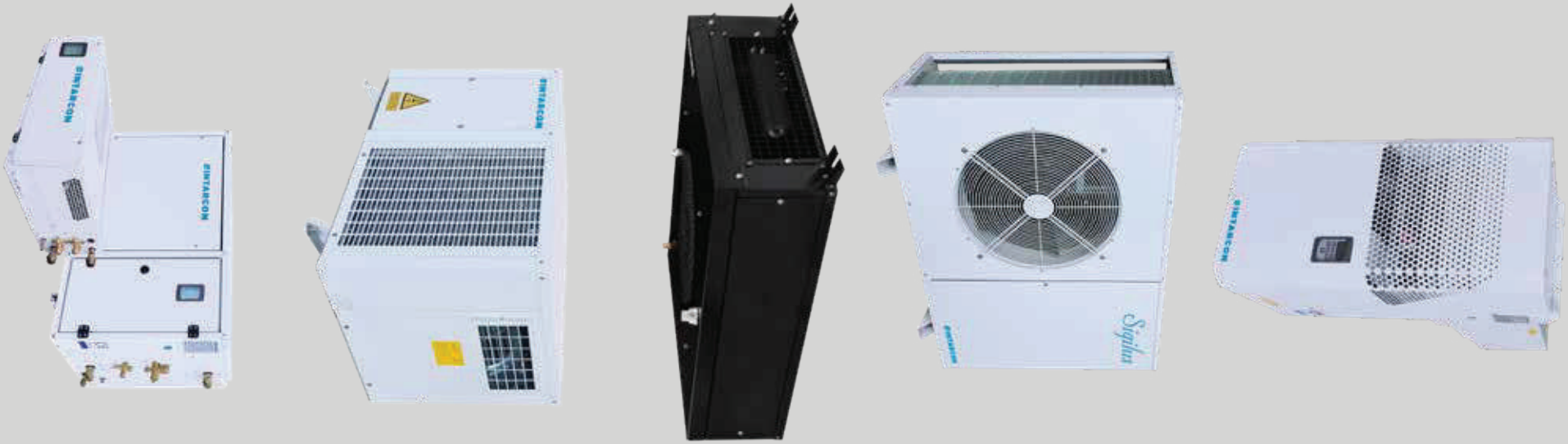
SINTARCON
SINTARCON
SINTARCON
Sigma
SINTARCON

DINTARCON

Sigilus

PROFE TECH

Ünvan: Xətai rayonu , Fəzail Bayramov 11/56Nombers
Əlaqə: (+994) 51 786 00 07
www.profetech.az